IDAHO DEPARTMENT OF JUVENILE CORRECTIONS

JUVENILE CORRECTIONS CENTER NAMPA - LAUNDRY, KITCHEN & CLINIC REMODEL

DIVISION OF PUBLIC WORKS
PROJECT #21535

1650 11TH AVE. NORTH, NAMPA, IDAHO 83687

100% DD REVIEW SET

OCTOBER 13, 2022

NOT FOR CONSTRUCTION

SHEET INDEX

GENERAL

0.0	COVER SHEET

ARCHITECTURAL

A1.0	OVERALL PLAN
A2.0	DEMOLITION FLOOR PLAN
A2.1	DEMOLITION REFLECTED CEILING PLAN
A2.2	FLOOR PLAN
A2.3	FINISH PLAN & ROOM FINISH SCHEDULE
A2.4	REFLECTED CEILING PLAN
A2.5	ROOF PLAN
A2.6	INTERIOR ELEVATIONS & ENLARGED PLAN
A3.0	DOOR SCHEDULE & DETAILS
A4.0	INTERIOR DETAILS

MECHANICAL

M0.0	MECHANICAL COVER SHEET
M1.0	HVAC DEMOLITION PLAN
M1.1	HVAC NEW PLAN
M2.0	HVAC ROOF PLAN
M3.0	HVAC DETAILS
M4.0	HVAC SCHEDULES
P1.0	PLUMBING DEMO FOUNDATION
P1.1	PLUMBING NEW FOUNDATION
P2.0	PLUMBING DEMO 1ST FLOOR
P2.1	PLUMBING NEW 1ST FLOOR
P3.0	PLUMBING OVERALL ROOF PLAN
P4.0	PLUMBING DETAILS
P5.0	PLUMBING SCHEDULES

ELECTRICAL

E0.0	ELECTRICAL COVER SHEET
E0.1	ELECTRICAL ENERGY COMPLIANCE
E1.0	ELECTRICAL DEMOLITION PLAN
E2.1	POWER PLAN
E2.2	LIGHTING PLAN
E2.3	SPECIAL SYSTEMS PLAN
E3.0	ELECTRICAL DETAILS / SCHEDULES

ABBREVIATIONS

A-E

A.B.	ANCHOR BOLT
ACOUS.	ACOUSTICAL
ADJ.	ADJUSTABLE
A.F.F.	ABOVE FINISH FLOOR
AGGR.	AGGREGATE
AL.	ALUMINUM
APPROX.	APPROXIMATE
ARCH.	ARCHITECTURAL
BD.	BOARD
BITUM.	BITUMINOUS
BLDG.	BUILDING
BLK.	BLOCK
BLKG.	BLOCKING
BOT.	BOTTOM
CAB.	CABINET
C.F.O.I.	CONTRACTOR-FURNISHED/OWNER-INSTALLED
C.L.	CENTERLINE
CLG.	CEILING
CLR.	CLEAR
C.M.U.	CONCRETE MASONRY UNIT
COL.	COLUMN
CONC.	CONCRETE
CONN.	CONNECTION
CONT.	CONTINUOUS
CORR.	CORRIDOR
CTSK.	COUNTERSUNK
CNTR.	COUNTER
CTR.	CENTER
DBL.	DOUBLE
DEPT.	DEPARTMENT
D.F.	DRINKING FOUNTAIN
DET.	DETAIL
DIA.	DIAMETER
DIM.	DIMENSION
DISP.	DISPENSER
DN.	DOWN
EA.	EACH
E.I.F.S.	EXTERIOR INSULATION AND FINISH SYSTEM
E.J.	EXPANSION JOINT
ELEC.	ELECTRICAL
ELEV.	ELEVATION
ELEV.	ELEVATOR
ENCL.	ENCLOSURE
EQ.	EQUAL
EQUIP.	EQUIPMENT
EXP.	EXPANSION
EXST.	EXISTING
EXT.	EXTERIOR

F-M

F.A.	FIRE ALARM
F.D.	FLOOR DRAIN
F.E.	FIRE EXTINGUISHER
F.E.C.	FIRE EXTINGUISHER CABINET
FF	FACTORY FINISH
F.H.C.	FIRE HOSE CABINET
FIN.	FINISH
FLR.	FLOOR
F.O.B.	FACE OF BUILDING
F.O.C.	FACE OF CONCRETE
F.O.E.	FACE OF EXISTING
F.O.F.	FACE OF FINISH
F.O.S.	FACE OF STUDS
FT.	FEET/FOOT
FTG.	FOOTING
FURR.	FURRING
GA.	GAUGE
GALV.	GALVANIZED
GND.	GROUND
GR.	GRADE
GYP.	GYPSUM BOARD
H.C.	HOLLOW CORE
HDWD.	HARDWOOD
H.M.	HOLLOW METAL
HORIZ.	HORIZONTAL
HGT.	HEIGHT
I.D.	INSIDE DIAMETER
INSUL.	INSULATION
INT.	INTERIOR
JAN.	JANITOR
JT.	JOINT
KIT.	KITCHEN
LAB.	LABORATORY
LAV.	LAVATORY
MAX.	MAXIMUM
MECH.	MECHANICAL
MTL.	METAL
MFR.	MANUFACTURER
MH.	MANHOLE
MIN.	MINIMUM
MISC.	MISCELLANEOUS
M.O.	MASONRY OPENING
MTD.	MOUNTED

N-R

N/C	NON-COMBUSTIBLE
N.I.C.	NOT IN CONTRACT
NO.	NUMBER
NOM.	NOMINAL
N.T.S.	NOT TO SCALE
O.A.	OVERALL
O.C.	ON CENTER
O.D.	OUTSIDE DIAMETER
O.F.C.I.	OWNER FURNISHED/ CONTRACTOR-INSTALLED
O.F.O.I.	OWNER FURNISHED/ OWNER INSTALLED
OFF.	OFFICE
OPNG.	OPENING
OPP.	OPPOSITE
PL.	PLATE
PL	PLASTIC LAMINATE
PLAS.	PLASTER
PLYWD.	PLYWOOD
PR.	PAIR
PT.	POINT
P.T.D.	PAPER TOWEL DISPENSER
P.T.R.	PAPER TOWEL RECEPTACLE
Q.T.	QUARRY TILE
RAD.	RADIUS
R.D.	ROOF DRAIN
REF.	REFERENCE
REFR.	REFRIGERATOR
REINF.	REINFORCED
REQ.	REQUIRED
RESIL.	RESILIENT
RM.	ROOM
R.O.	ROUGH OPENING
R.W.L.	RAIN WATER LEADER

S-Z

S.C.	SOLID CORE
SECT.	SECTION
SHTH'G.	SHEATHING
SHT.	SHEET
SIM.	SIMILAR
SPEC.	SPECIFICATION
SQ.	SQUARE
S.S.	STAINLESS STEEL
STA.	STATION
STD.	STANDARD
STL.	STEEL
STOR.	STORAGE
STRL.	STRUCTURAL
SUSP.	SUSPENDED
T.C.	TOP OF CURB
TEL.	TELEPHONE
T.O.	TOP OF
T.O.B.	TOP OF BLOCK
T.O.C.	TOP OF CURB
T.O.P.	TOP OF PLATE
T.O.W.	TOP OF WALL
TRD.	TREAD
T.V.	TELEVISION
TYP.	TYPICAL
U.O.N.	UNLESS OTHERWISE NOTED
UR.	URINAL
VERT.	VERTICAL
VEST.	VESTIBULE
W/	WITH
W/O	WITHOUT
W.C.	WATER CLOSET
WD.	WOOD
W.P.	WATERPROOF
W.R.	WATER RESISTANT
WT.	WEIGHT

FOR ADDITIONAL MATERIAL FINISH ABBREVIATIONS, SEE MATERIAL LEGEND ON ROOM FINISH SHEETS.

GRAPHIC AND MATERIAL SYMBOLS

GRID LINE (NUMBERS AND LETTERS)

DETAIL IDENTIFICATION — DETAIL (SIM.), SHEET NUMBER

WALL SECTION — SECTION IDENTIFICATION, SHEET NUMBER

BUILDING SECTION — SECTION IDENTIFICATION, SHEET NUMBER

ELEVATIONS — ELEVATION IDENTIFICATION, SHEET NUMBER

ROOM IDENTIFICATION — ROOM NAME, ROOM NUMBER

KEYNOTE (NUMBER)

WALL TAG — TYPE NUMBER

REVISION (NUMBER)

DOOR IDENTIFICATION — ROOM REFERENCE, DOOR LETTER

WINDOW IDENTIFICATION — WINDOW TYPE (LETTER OR NUMBER)

EARTH FILL
GRAVEL FILL
CONCRETE
SAND OR MORTAR
BRICK OR STONE
CMU
STEEL
FINISH WOOD MEMBER
WOOD FRAMING MEMBER
WOOD BLOCKING
BATT BLANKET / BLOWN-IN INSULATION / SPRAY APPLIED FOAM INSULATION
RIGID INSULATION
PLYWOOD
GYPSUM BOARD
GLASS
CERAMIC TILE (PROFILE ONLY)
ACOUSTICAL TILE

DATUM POINT — CONTROL POINT OR WORK POINT

MATCHLINE

NORTH ARROW

CONSULTANTS

ARCHITECT
LOMBARD CONRAD ARCHITECTS
472 W. WASHINGTON ST.
BOISE, IDAHO 83702
(208) 345-6677

MECHANICAL ENGINEER
MUSGROVE ENGINEERING P.A.
234 S. WHISPERWOOD WAY
BOISE, IDAHO 83709
(208) 384-0585

ELECTRICAL ENGINEER
MUSGROVE ENGINEERING P.A.
234 S. WHISPERWOOD WAY
BOISE, IDAHO 83709
(208) 384-0585

VICINITY MAP

PROJECT SITE

NAMPA, IDAHO

N

APPROVAL AREA

LOMBARD CONRAD ARCHITECTS

ARCHITECTURE | PLANNING
INTERIOR DESIGN

472 W. Washington St. | Boise, ID 83702
P 208.345.6677 | F 208.344.9002

COPYRIGHT All rights reserved. Reproduction or use in any form or by any means – graphic, electronic, mechanical, etc. – without written permission of **LOMBARD - CONRAD ARCHITECTS, P.C.** is unlawful and subject to criminal prosecution.

STAMP:

100% DD SET NOT FOR CONSTRUCTION

DPW 21535 - IDJC LAUNDRY, KITCHEN & CLINIC REMODEL - JCCN

IDJC - JCC NAMPA DPW PROJECT #21535

CONSULTANT:

MRK.	DATE	DESCRIPTION

JOB N0.:	22003.01
DATE:	11/30/2022
DRAWN BY:	TEAM LC
CHECKED BY:	AT

PHASE: **100% DESIGN DEVELOPMENT**

COVER SHEET

SHEET NO.

0.0

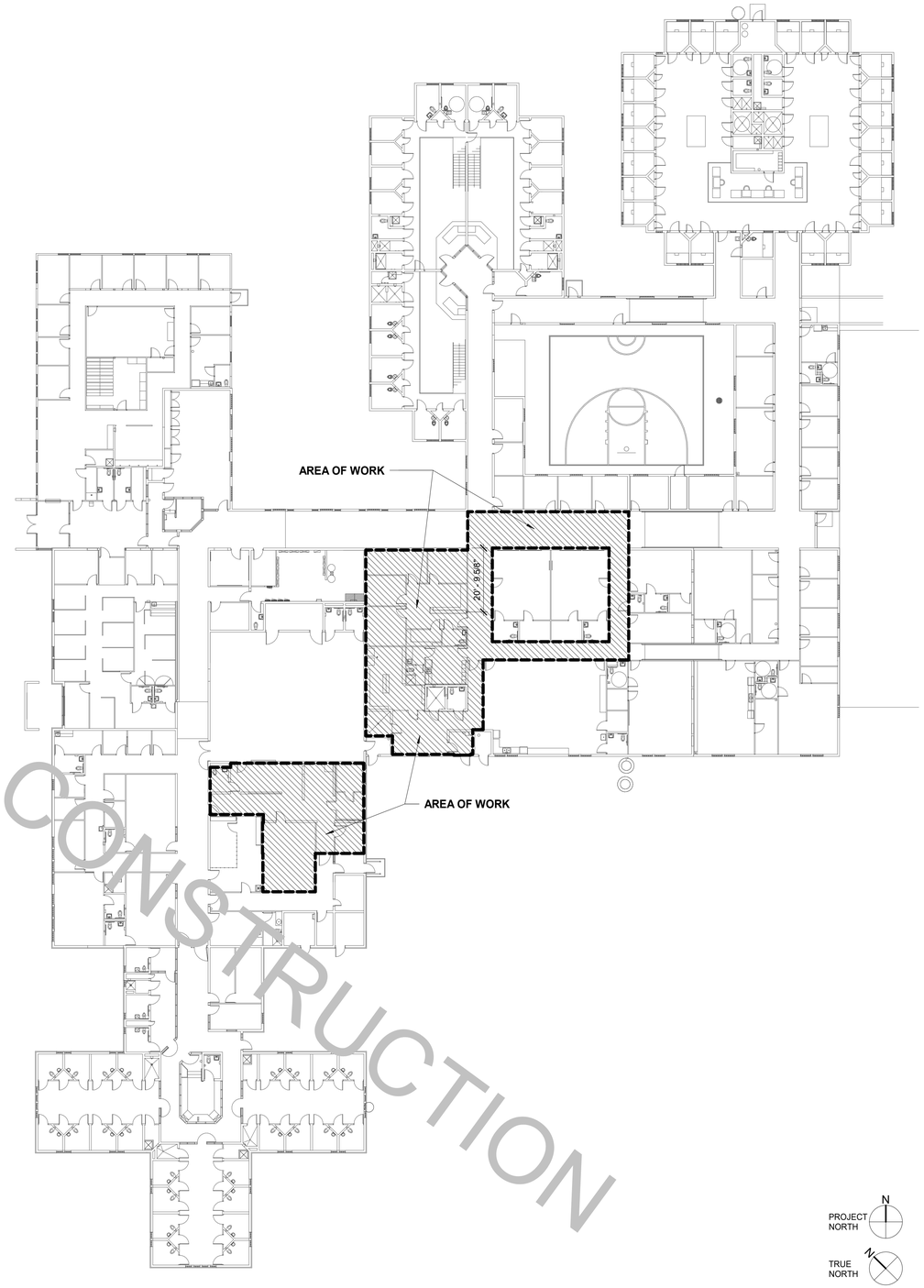

NOT FOR CONSTRUCTION

PROJECT NORTH

TRUE NORTH

APPROVAL AREA

D3 OVERALL EXISTING PLAN
3/64" = 1'-0"

LOMBARD CONRAD ARCHITECTS
ARCHITECTURE | PLANNING
INTERIOR DESIGN
472 W. Washington St. | Boise, ID 83702
P 208.345.6677 | F 208.344.9002

COPYRIGHT All rights reserved. Reproduction or use in any form or by any means – graphic, electronic, mechanical, etc. – without written permission of **LOMBARD - CONRAD ARCHITECTS, P.C.** is unlawful and subject to criminal prosecution.

STAMP:

100% DD SET
NOT FOR CONSTRUCTION

DPW 21535 - IDJC LAUNDRY, KITCHEN & CLINIC REMODEL - JCCN

IDJC - JCC NAMPA DPW PROJECT #21535

CONSULTANT:

MRK	DATE	DESCRIPTION

JOB N0.:	22003.01
DATE:	11/30/2022
DRAWN BY:	TEAM LC
CHECKED BY:	AT
PHASE:	100% DESIGN DEVELOPMENT

OVERALL PLAN

SHEET NO.

A1.0

DEMOLITION GENERAL NOTES

1. PRIOR TO BEGINNING ANY DEMOLITION, A SURVEY OF THE PROPOSED DEMOLITION AREA SHALL BE MADE BY THE CONTRACTOR TO DETERMINE THE CONNECTIONS, FRAMING METHODS, AND CONDITIONS OF THE AREA TO BE DEMOLISHED.
2. ALL MATERIALS AND WORKMANSHIP SHALL CONFORM TO ALL APPLICABLE STATE AND LOCAL CODES, LAWS, AND REGULATIONS.
3. TAKE CAUTION TO PRESERVE AND PROTECT FINISHES, CASEWORK AND EQUIPMENT WHICH ARE TO REMAIN.
4. ALL DEMOLISHED MATERIALS SHALL BE PROPERLY DISPOSED IN ACCORDANCE WITH ALL LAWS AND REGULATIONS. ALL ITEMS THE OWNER DESIRES TO SALVAGE IN THE AREAS OF DEMOLITION SHALL BE IDENTIFIED PRIOR TO DEMOLITION. CONTRACTOR SHALL REMOVE AND DELIVER TO OWNER THOSE ITEMS IDENTIFIED.
5. EQUIPMENT MAY NEED TO BE REMOVED TO ACCOMODATE NEW FINISHES AND REPLACED AFTER INSTALL. COORDINATE WITH NEW CONSTRUCTION SCOPE OF WORK.
6. PRIOR TO PAINTING OF WALLS, FILL ALL HOLES AND BLEMISHES SO THERE ARE NO NOTICEABLE SEAMS OR BREAKS IN FINISH MATERIAL.

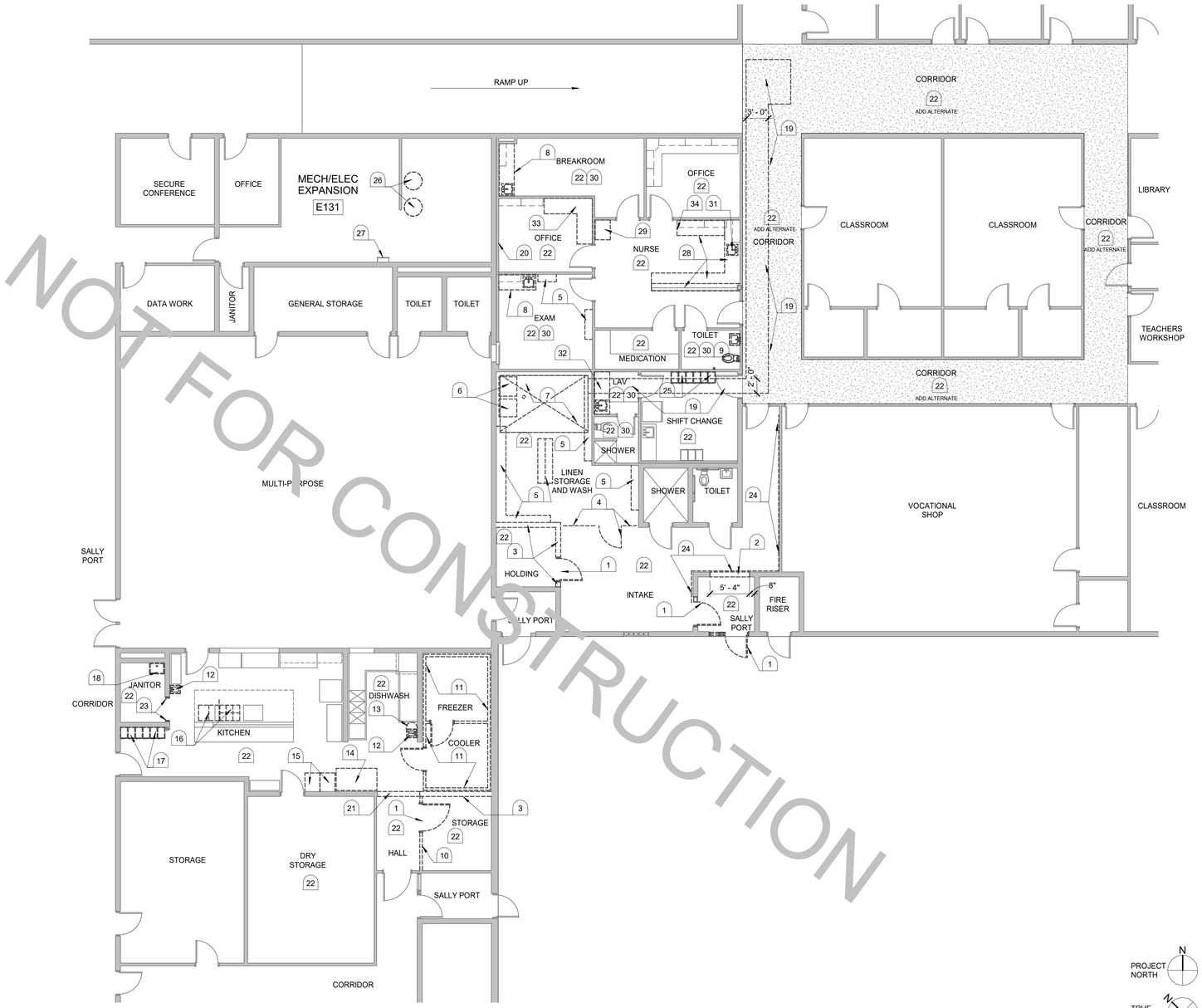

NOT FOR CONSTRUCTION

D2 DEMOLITION PLAN
1/8" = 1'-0"

KEYNOTES

1. REMOVE EXISITNG HOLLOW METAL DOOR, FRAME AND ALL ASSOCIATED ITEMS. RE: NEW CONSTRUCTION SCOPE OF WORK.
2. REMOVE EXISTING WALL SYSTEM AND ALL ASSOCIATED ITEMS TO ACCOMODATE NEW DOOR SYSTEM. RE: NEW CONSTRUCTION SCOPE OF WORK.
3. REMOVE EXISTING CMU WALL AND ALL ASSOCAITED ITEMS. RE: NEW CONSTRUCTION SCOPE OF WORK.
4. REMOVE EXISTING CHAIN LINK FENCING, MAN GATE AND ALL ASSOCIATED ITEMS.
5. REMOVE EXISTING WALL HUNG SHELVING AND ALL ASSOCIATED ITEMS. RE: NEW CONSTRUCTION SCOPE OF WORK.
6. EXISTING WASHER AND DRYER TO BE REMOVED BY OWNER. MECHANICAL AND ELECTRICAL DRAWING AND NEW CONSTRUCTION SCOPE OF WORK.
7. REMOVE EXISTING SLAB ON GRADE TO ACCOMODATE NEW THICKNED EQUIPMENT SLAB AND TROUGH DRAIN. RE: MECHANICAL DRAWINGS AND NEW CONSTRUCTION SCOPE OF WORK.
8. REMOVE EXISTING COUNTER TOP, SINK, FAUCET AND ALL ASSOCIATED ITEMS. RE: MECHANICAL DRAWINGS AND NEW CONSTRUCTION SCOPE OF WORK. RETAIN PLUMBING FOR NEW SINK.
9. REMOVE EXISTING PLASTIC LAMINATE WAINSCOT FROM WALLS TO RECEIVE NEW FINISH MATERIAL. RE: NEW CONSTRUCTION SCOPE OF WORK.
10. REMOVE EXISITNG FRAMED WALL AND ALL ASSOCIATED ITEMS. RE: NEW CONSTRUCTION SCOPE OF WORK.
11. REMOVE EXISTING WALK-IN FREEZER, REFRIGERATOR AND ALL ASSOCIATED ITEMS. RE: MECHANICAL, ELECTRICAL AND NEW CONSTRUCTION SCOPE OF WORK.
12. REMOVE EXISTING HANDWASH SINK AND ALL ASSOCIATED ITEMS. RE: MECHANICAL DRAWING AND NEW CONSTRUCTION SCOPE OF WORK.
13. REMOVE EXISTING WATER SOFTENER AND ALL ASSOCIATED ITEMS. RE: MECHANICAL DRAWINGS AND NEW SCONSTRUCTION SCOPE OF WORK.
14. REMOVE EXISITNG REFRIGERATOR.
15. REMOVE EXISITNG KITCHEN EQUIPMENT TABLES.
16. REMOVE EXISTING STOVE, RANGE AND ALL ASSOCIATED ITEMS. RE: MECHANICAL DRAWINGS AND NEW CONSTRUCTION SCOPE OF WORK.
17. REMOVE EXISTING LOCKER SYSTEM AND ALL ASSOCIATED ITEMS.
18. REMOVE EXISTING JANITOR SINK AND ALL ASSOCIATED ITEMS. RE: MECHANICAL DRAWINGS AND NEW CONSTRUCTION SCOPE OF WORK.
19. REMOVE EXISTING SLAB ON GRADE FOR NEW SEWER LINE EXTENTION. RE: MECHANICAL DRAWINGS AND NEW CONSTRUCTION SCOPE OF WORK.
20. RETAIN AND PROTECT EXISTING WALL MURAL ON THIS WALL.
21. REMOVE EXISTING CMU WALL ABOVE OPENING AND ALL ASSOCIATED ITEMS. RE: NEW CONSTRUCTION SCOPE OF WORK.
22. REMOVE EXISTING FLOORING, WALL BASE AND FRP ON WALLS WHERE OCCURS TO ACCCOMODATE NEW FINISHES. RE: NEW CONSTRUCTION SCOPE OF WORK.
23. REMOVE EXISTING DOOR FRAME AND ALL ASSOCIATED ITEMS TO ACCOMODATE NEW DOOR AND FRAME. RE: NEW CONSTRUCTION SCOPE OF WORK.
24. DASHED LINE INDICATES EXTENTS OF CHAIR RAIL REMOVAL FROM THIS WALL.
25. REMOVE EXISTING DOUBLE TIER LOCKERS AND RETAIN FOR REINSTALLTION.
26. EXISTING WATER HEATERS TO BE REPLACED, SEE MECHANICAL.
27. EXISTING ROOF ACCESS LADDER.
28. REMOVE EXITING COUNTERTOP, BACKSPLASH AND ALL ASSOCIATED ITEMS. PRESERVE AND PROTECT CASEWORK TO RECEIVE NEW COUNTERTOP. RE: NEW CONSTRUCTION SCOPE OF WORK.
29. REMOVE EXISTING COUNTERTOP, BASE CABINET AND OR SUPPORTS. RE: NEW CONSTRUCTION SCOPE OF WORK.
30. REMOVE ALL PAPER TOWEL DISPENSERS, TOILET PAPER DISPENSERS, TOILET SEAT COVER DISPENSERS, CLOTHES HOOKS, MIRRORS, SOAP DISPENSERS AND ANY OTHER WALL HUNG ITEMS TO ACCOMODATE NEW PAINT AND FINISH. RE: NEW CONSTRUCTION SCOPE OF WORK. RETAIN ALL FOR REINSTALLTION AT THE SAME LOCATION. CONFIRM ALL LOCATIONS WITH OWNER PRIOR TO INSTALL.
31. REMOVE EXISTING SINK, FAUCET AND ALL ASSOCIATED ITEMS. RE: NEW CONSTRUCTION SCOPE OF WORK AND MECHANICAL DRAWINGS.
32. REMOVE EXISTING COUNTER TOP, BACKSPLASH, SINK, FAUCET, CASEWORK AND ALL ASSOCIATED ITEMS. RE: MECHANICAL DRAWINGS AND NEW CONSTRUCTION SCOPE OF WORK. RETAIN PLUMBING FOR NEW WALL HUNG SINK.
33. REMOVE EXITING COUNTERTOP, BACKSPLASH, FINISH PANELS AND ALL ASSOCIATED ITEMS. RE: NEW CONSTRUCTION SCOPE OF WORK.
34. PROVIDE 12" CLEAR DIMENSION FROM DOOR TO FACE OF CABINET TO MEET ADA REQUIREMENTS. RELOCATE CASEWORK END PANEL AS REQUIRED TO ACCOMODATE. RE: NEW CONSTRUCTION SCOPE OF WORK.

APPROVAL AREA

LOMBARD CONRAD ARCHITECTS
ARCHITECTURE | PLANNING
INTERIOR DESIGN
472 W. Washington St. | Boise, ID 83702
P 208.345.6677 | F 208.344.9002

COPYRIGHT All rights reserved. Reproduction or use in any form or by any means – graphic, electronic, mechanical, etc. – without written permission of **LOMBARD - CONRAD ARCHITECTS, P.C.** is unlawful and subject to criminal prosecution.

STAMP:

100% DD SET NOT FOR CONSTRUCTION

DPW 21535 - IDJC LAUNDRY, KITCHEN & CLINIC REMODEL - JCCN

IDJC - JCC NAMPA DPW PROJECT #21535

CONSULTANT:

MRK	DATE	DESCRIPTION

JOB N0.:	22003.01
DATE:	11/30/2022
DRAWN BY:	TEAM LC
CHECKED BY:	AT
PHASE:	100% DESIGN DEVELOPMENT

DEMOLITION FLOOR PLAN

SHEET NO.

A2.0

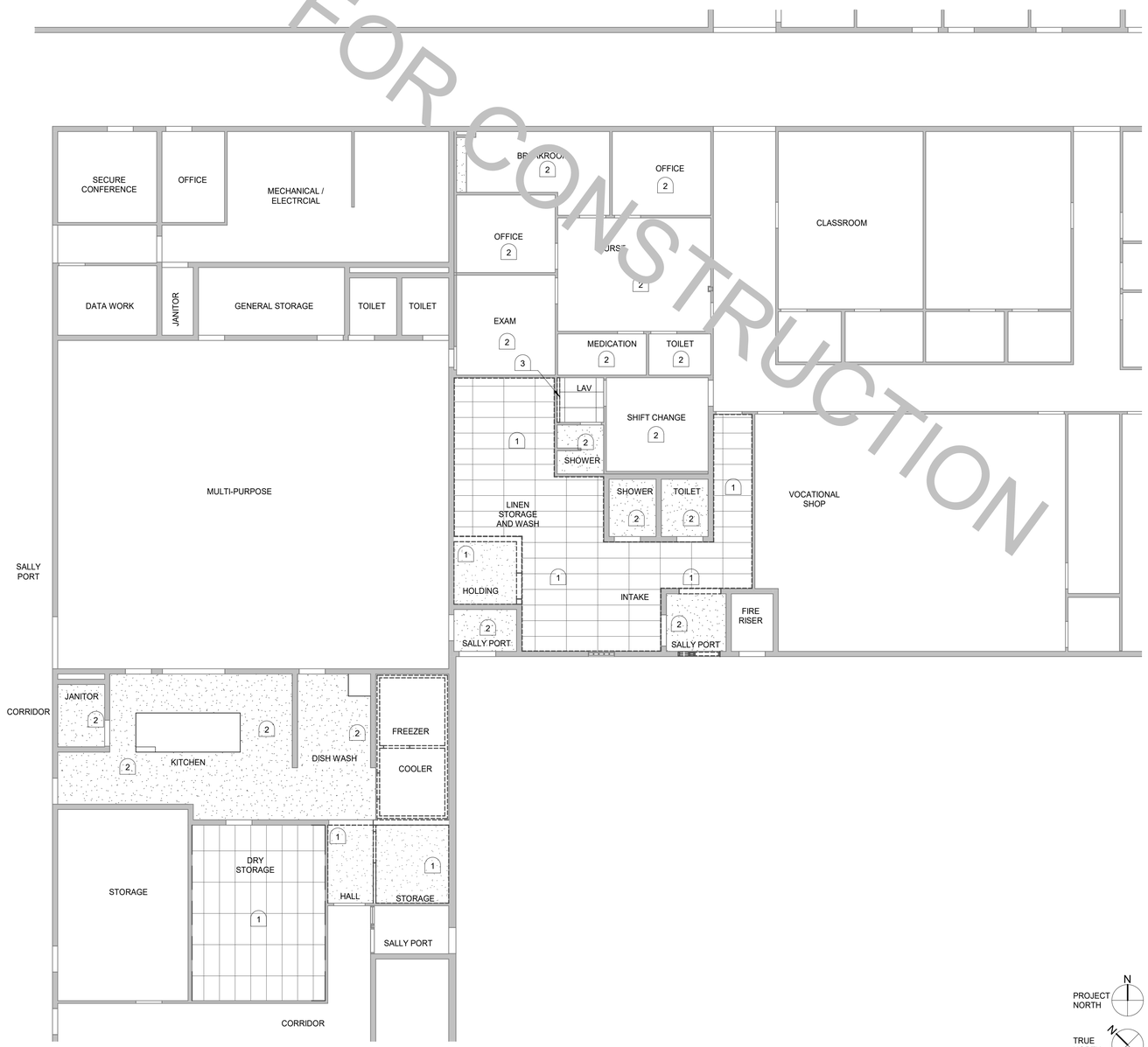

NOT FOR CONSTRUCTION

D2 REFLECTED CEILING DEMOLITION PLAN
1/8" = 1'-0"

KEYNOTES

1. REMOVE EXISTING CEILING SYSTEM AND ALL ASSOCIATED ITEMS. RE: ELECTRICAL AND MECHANICAL DRAWINGS AND NEW CONSTRUCTION SCOPE OF WORK.
2. EXISTING CEILING TO REMAIN.
3. CUT DOWN EXISTING CEILING GRID AND TILES AT NEW FURRED WALL

DEMOLITION GENERAL NOTES

1. PRIOR TO BEGINNING ANY DEMOLITION, A SURVEY OF THE PROPOSED DEMOLITION AREA SHALL BE MADE BY THE CONTRACTOR TO DETERMINE THE CONNECTIONS, FRAMING METHODS, AND CONDITIONS OF THE AREA TO BE DEMOLISHED.
2. ALL MATERIALS AND WORKMANSHIP SHALL CONFORM TO ALL APPLICABLE STATE AND LOCAL CODES, LAWS, AND REGULATIONS.
3. TAKE CAUTION TO PRESERVE AND PROTECT FINISHES, CASEWORK AND EQUIPMENT WHICH ARE TO REMAIN.
4. ALL DEMOLISHED MATERIALS SHALL BE PROPERLY DISPOSED IN ACCORDANCE WITH ALL LAWS AND REGULATIONS. ALL ITEMS THE OWNER DESIRES TO SALVAGE IN THE AREAS OF DEMOLITION SHALL BE IDENTIFIED PRIOR TO DEMOLITION. CONTRACTOR SHALL REMOVE AND DELIVER TO OWNER THOSE ITEMS IDENTIFIED.
5. EQUIPMENT MAY NEED TO BE REMOVED TO ACCOMODATE NEW FINISHES AND REPLACED AFTER INSTALL. COORDINATE WITH NEW CONSTRUCTION SCOPE OF WORK.

APPROVAL AREA

LOMBARD CONRAD ARCHITECTS
ARCHITECTURE | PLANNING
INTERIOR DESIGN
472 W. Washington St. | Boise, ID 83702
P 208.345.6677 | F 208.344.9002

COPYRIGHT All rights reserved. Reproduction or use in any form or by any means – graphic, electronic, mechanical, etc. – without written permission of **LOMBARD - CONRAD ARCHITECTS, P.C.** is unlawful and subject to criminal prosecution.

STAMP:

100% DD SET
NOT FOR CONSTRUCTION

DPW 21535 - IDJC LAUNDRY, KITCHEN & CLINIC REMODEL - JCCN

IDJC - JCC NAMPA DPW PROJECT #21535

CONSULTANT:

MRK	DATE	DESCRIPTION

JOB N0.:	22003.01
DATE:	11/30/2022
DRAWN BY:	TEAM LC
CHECKED BY:	AT
PHASE:	100% DESIGN DEVELOPMENT

DEMOLITION REFLECTED CEILING PLAN

SHEET NO.

A2.1

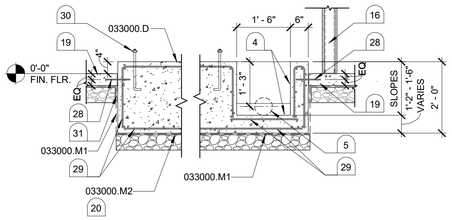

A1 TROUGH DETAIL

1/2" = 1'-0"

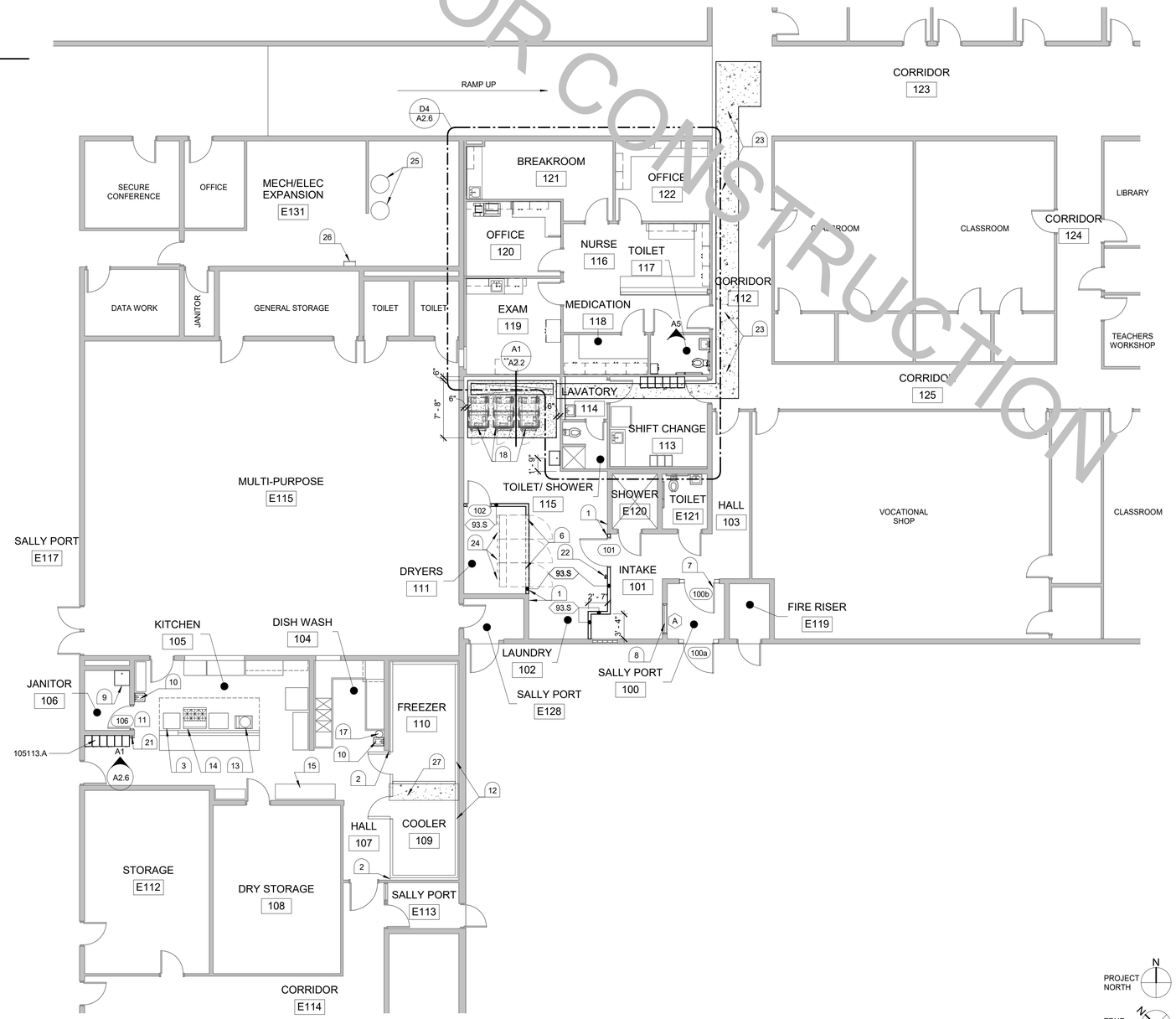

D2 FLOOR PLAN

1/8" = 1'-0"

PROJECT NORTH

TRUE NORTH

NOT FOR CONSTRUCTION

KEYNOTES

1. ALIGN FACE OF NEW FRAMED WALL WITH EXISTING WALL.
2. CLOSURE AT JAMBS OF OPENING BY FREEZER COOLER INSTALLER.
3. REOLCATE EXISTING DOUBLE OVEN TO THIS LOCATION.
4. CAST IN PLACE TROUGH DRAIN, SACK FINISH TO SMOOTH CONSISTENT SURFACE. PAINT WITH ELECTROMETRIC WATERPROOFING MEMBRANE
5. DRAIN LINE OUT SIDE OF TROUGH, SEE MECHANICAL.
6. DRYER ENCLOSURE TO ROOF DECK ABOVE. COORDINATE OPENING SIZE WITH NEW DRYERS. INSTALL XX GA STAINLESS STEEL CLOSURE XXXXXX.
7. NEW SECURITY HOLLOW METAL DOOR IN EXISTING CMU WALL, SEE DOOR SCHEDULE, SHEET A3.0.
8. NEW SECURITY HOLLOW METAL WINDOW IN EXISTING CMU WALL, SEE FRAME TYPES A3.0.
9. NEW FLOOR MOUNTED JANITOR SINK, SEE MECHANICAL.
10. NEW HANDWASH SINK, SEE MECHANICAL.
11. NEW DOOR AND FRAME IN EXISTING MASONRY OPENING.
12. WALK-IN FREEZER AND COOLER. O.F.C.I.
13. NEW GAS-FIRE KETTLE, O.F.C.I.
14. NEW RANGE, O.F.C.I.
15. NEW PREP TABLE, O.F.O.I.
16. EXISTING STUD WALL
17. NEW WATER SOFTENER, SEE MECHANICAL.
18. EXTRACTOR. O.F.C.I.
19. EXISTING CONCRETE SLAB ON GRADE.
20. 6" MINIMUM COMPACTED 3/4" MINUS GRAVEL FILL.
21. EXISTING K TYPE FIRE EXTINGUISHER TO REMAIN AT THIS LOCATION.
22. EXISTING FIRE EXTINGUISHER TO BE REMOVED FROM JANITOR 106 AND RELOCATE TO LAUNDRY 102.
23. PATCH BACK SLAB ON GRAGE AND FLOORING IN THIS AREA.
24. GAS DRYER, O.F.C.I.
25. NEW WATER HEATER. SEE MECHANICAL.
26. EXISTING ROOF ACCESS LADDER.
27. INFILL EXISTING RECESSED FLOOR SLAB WITH 4,000 PSI CONCRETE BELOW COOLER AS INDICATED ON PLAN. RE: WALK-IN COOLER DRAWINGS.
28. #3 X 1'-0" BAR AT 18" O.C. SET WITH HILTI 150-MAX ADHESIVE, 3" EMBED.
29. #4 AT 12" O.C. EACH WAY T AND B WITH CORNER BARS.
30. ANCHOR BOLTS AS REQUIRED. RE: EXTRACTOR EQUIPMENT DRAWINGS FOR LOCATION AND QUANTITY.
31. OVERLAP EXISTING VAPOR BARRIER WITH NEW VAPOR BARRIER PER MANUFACTURERS RECOMENDATION.

CONDOC

033000.D	CONCRETE SLAB-ON-GRADE, SEE STRUCTURAL.
033000.M1	VAPOR RETARDER.
033000.M2	GRANULAR FILL.
105113.A	CORRIDOR LOCKER.

GENERAL NOTES

1. ALL INTERIOR WALLS SHALL EXTEND FROM FINISH FLOOR TO BOTTOM OF STRUCTURE UNLESS NOTED OTHERWISE.
2. SEE FINISH PLANS FOR ROOM FINISH SCHEDULES AND FLOOR FINISH INFORMATION.
3. PROVIDE SOUND ATTENUATION INSULATION (**092900**) AT ALL INTERIOR WALLS FROM FLOORS TO DECK U.O.N.
4. SEE DETAIL **XXXX** FOR TYPICAL WALL MOUNTED ACCESSORY BACKING.
5. SEE FINISH PLANS AND ENLARGED PLANS FOR INTERIOR ELEVATION CALLOUTS.

APPROVAL AREA

LOMBARD CONRAD ARCHITECTS
ARCHITECTURE | PLANNING
INTERIOR DESIGN
472 W. Washington St. | Boise, ID 83702
P 208.345.6677 | F 208.344.9002

COPYRIGHT All rights reserved. Reproduction or use in any form or by any means – graphic, electronic, mechanical, etc. – without written permission of **LOMBARD - CONRAD ARCHITECTS, P.C.** is unlawful and subject to criminal prosecution.

STAMP:

100% DD SET NOT FOR CONSTRUCTION

DPW 21535 - IDJC LAUNDRY, KITCHEN & CLINIC REMODEL - JCCN

IDJC - JCC NAMPA DPW PROJECT #21535

CONSULTANT:

MRK	DATE	DESCRIPTION

JOB N0.:	**22003.01**
DATE:	**11/30/2022**
DRAWN BY:	**TEAM LC**
CHECKED BY:	**AT**
PHASE:	**100% DESIGN DEVELOPMENT**

FLOOR PLAN

SHEET NO.

A2.2

NOT FOR CONSTRUCTION

D1 FINISH PLAN
1/8" = 1'-0"

ROOM FINISH SCHEDULE

ROOM NO.	ROOM NAME	FLOOR	BASE	WALLS N	WALLS E	WALLS S	WALLS W	CEILING MAT.	CEILING FIN.	REMARKS
100	SALLY PORT	EM	RB1	EP1	EP1	EP1	EP1	EX	P1	2, 3
101	INTAKE	RSF2	RB1	EP1	EP1	EP1	FRP2	ACP1	FF	1, 2
102	LAUNDRY	RSF2	RB2	FRP2	FRP2	FRP2, EP1	FRP2	ACP2	FF	1, 2, 5
103	HALL	RSF2	RB1	EP1	EP1	EP1	EP1	ACP1	FF	1, 2, 3, 6
104	DISH WASH	RSF2	RSF2	FRP1	FRP1	FRP1	FRP1	EX	EP1	2, 3, 4
105	KITCHEN	RSF2	RSF2	FRP1	FRP1	FRP1	FRP1	EX	EP1	2, 3, 4
106	JANITOR	RSF2	RSF2	EP1/FRP1	EP1/FRP1	EP1	EP1	EX	EP1	1, 2, 3, 4
107	HALL	RSF2	RSF2	--	--	FRP1	FRP1	EX	EP1	2, 3, 4
108	DRY STORAGE	RSF2	RSF2	EP1	EP1	EP1	EP1	ACP2	EP1	2, 3, 4
109	COOLER	RSF2	RSF2	--	--	--	--	--	--	12
110	FREEZER	RSF2	RSF2	--	--	--	--	--	--	12
111	DRYERS	NF	NF	NF	NF	NF	NF	OTS	NF	--
112	CORRIDOR	CPT1	RB1	--	--	--	--	--	--	8, 9, 11
113	SHIFT CHANGE	CPT1	RB1	P1	P1	P1	P1	--	--	7, 9
114	LAVATORY	RSF3	RB2	EP1	EP1	EP1	EP1	--	--	3, 5, 9
115	TOILET/ SHOWER	RSF3	RB2	EP1	EP1	EP1	EP1	--	--	3, 5, 9
116	NURSE	CPT2/RTF	RB1	P3	P3	P1	P1	--	--	7, 9, 13
117	TOILET	RSF1	RSF1	EP1/WP3	EP1/WP3	EP1/WP3	EP1/WP3	--	--	1, 3, 4, 9
118	MEDICATION	RSF1	RB1	P1	P1	P1	P1	--	--	9
119	EXAM	RTF	RB1	P3/WP3	P1	P1	P1	--	--	1, 7, 10
120	OFFICE	CPT2	RB1	P1	P1	P1	--	--	--	9, 10
121	BREAKROOM	RTF	RB1	P4	P1	P1	P1	--	--	7, 9
122	OFFICE	CPT2	RB1	P1	P4	P1	P1	--	--	7, 9
123	CORRIDOR	CPT1	RB1	--	--	--	--	--	--	8, 9, 11
124	CORRIDOR	CPT1	RB1	--	--	--	--	--	--	8, 9, 11
125	CORRIDOR	CPT1	RB1	--	--	--	--	--	--	8, 9, 11

ROOM FINISH REMARKS

1. MULTIPLE WALL FINISHES AT THIS LOCATION. REFER TO FINISH PLAN FOR EXTENT.
2. EPOXY PAINT AT ALL CMU WALLS IN THIS LOCATION.
3. EPOXY PAINT AT ALL GYPSUM SURFACES IN THIS LOCATION.
4. PROVIDE 6" INTEGRAL SELFCOVE BASE AT THIS LOCATION. REFER TO DETAILS **B5** / **A4.0** AND **C5** / **A4.0**.
5. PROVIDE BEAD OF SEALANT AT TOP AND BOTTOM EDGE OF RUBBER BASE IN THIS LOCATION. REFER TO DETAIL **D5** / **A4.0**.
6. DUAL WALL GUARD AT THIS LOCATION. REFER TO FINISH PLAN FOR EXTENT.
7. ACCENT PAINT AT THIS LOCATION.
8. NEW FLOORING AND BASEAT THIS LOCATION. WORK IN THIS ROOM TO BE PART OF ALT ALTERNATE # xxxxxxxxxxxxxxx. REFER TO SPEC. SECTION 012300.
9. EXISTING CEILING TO REMAIN.
10. EXISTING MURAL AT WEST WALL OF THIS ROOM TO REMAIN.
11. EXISTING WALL FINISHES TO REMAIN AT THIS LOCATION. TAKE PRECAUSION TO PROTECT FROM DAMAGE.
12. PREFABRICATED FACTORY FINISH WALL AND CEILING AT FREEZER / COOLER UNITS.
13. MULTIPLE FLOOR FINISHES AT THIS LOCATION. REFER TO FINISH PLAN FOR EXTENT.

MATERIAL LEGEND

SYMBOL	DESCRIPTION
ACP	SUSPENDED ACOUSTICAL CEILING PANEL (095113)
CPT	CARPET TILE (096813)
EM	ENTRY MAT (096813)
EP	EPOXY PAINT (099123)
EX	EXISTING TO REMAIN
FRP	FIBERGLASS REINFORCED WALL PANEL (066400)
GYP	GYPSUM BOARD (092900)
L	LOCKERS (105113)
NF	NO FINISH
OTS	OPEN TO STRUCTURE
P	PAINT (099123)
RB	RUBBER BASE (096513)
RSF	RESILIENT SHEET FLOORING (096516)
RTF	RESILIENT TILE FLOORING (096519)
WP	WALL PROTECTION (102600)

KEYNOTES

1. DUAL WALL GUARD (**WP1**) AND (**WP2**) AT THIS LOCATION. SEE DETAIL **D4** / **A4.0**. TERMINATE 3" FROM CORNERS, DOOR AND WINDOW FRAMES. DO NOT MITER.
2. FIBERBLASS REINFORCED WALL PANEL (**FRP2**) AT THIS LOCATION, FULL HEIGHT.
3. FIBERGLASS REINFORCED WALL PANEL (**FRP1**) WAINSCOT AT THIS LOCATION. INSTALL TO 54" A.F.F., EPOXY PAINT ABOVE.
4. RIGID SHEET WALL PROTECTION (**WP3**) AT THIS LCOATION. SEE ELEVATION FOR LAYOUT AND EXTENT.
5. ALIGN FLOOR FINISH TRANSITION WITH FACE OF WALL, MILLWORK OR DOOR FRAME AS INIDCATIED.

FINISH LEGEND

SYMBOL	DESCRIPTION
	NOT IN SCOPE
CPT1	CARPET TILE (**096813**)
CPT2	CARPET TILE (**096813**)
RTF	RESILIENT TILE FLOORING (**096519**)

GENERAL FINISH NOTES

1. MATERIAL HATCHES ARE SHOWN IN AREAS WHERE MULTIPLE FLOOR FINISHES OCCUR. REFER TO ROOM FINISH SCHEDULE FOR FINISH DESIGNATION.
2. NUMBERS AFTER SYMBOLS REPRESENT DIFFERENT STYLES AND COLORS AS DEFINED IN SPECIFICATIONS.
3. TERMINATE DISSIMILAR COLORS AND FINISHES WITH CLEAN, CRISP, STRAIGHT LINE.
4. PAINT ALL SURFACES OF H.M. FRAMES, H.M. DOORS, LOUVERS AND GRILLS U.N.O. COLORS AS SELECTED BY ARCHITECT.
5. PROVIDE SEALANT AT ALL GYP. BOARD TO DISSIMILAR MATERIALS.
6. ALL GYPSUM BOARD ON RESTROOM AND JANITOR ROOM WALLS SHALL BE MOISTURE RESISTANT.
7. ALL EXPOSED CMU SURFACES TO BE PAINTED (**099113**).
8. SEE DETAIL **A5** / **A4.0** FOR TYPICAL FLOOR TRANSITIONS.
9. THRESHOLDS TO OCCUR AT CENTERLINE OF DOOR UNLESS NOTED OTHERWISE.
10. SEE REFLECTED CEILING PLAN SHEET **A2.4** FOR SOFFIT AND FURR-DOWNS AND OTHER CEILING FEATURES.
11. SEE DETAIL **A1** / **A8.0** FOR TYPICAL WALL MOUNTED ACCESSORIES.
12. SEE DETAIL **A3** / **A8.0** FOR TYPICAL ADA SIGNAGE MOUNTING, SEE SPECIFICATION SECTION **101423**.

APPROVAL AREA

LOMBARD CONRAD ARCHITECTS
ARCHITECTURE | PLANNING
INTERIOR DESIGN
472 W. Washington St. | Boise, ID 83702
P 208.345.6677 | F 208.344.9002

COPYRIGHT All rights reserved. Reproduction or use in any form or by any means – graphic, electronic, mechanical, etc. – without written permission of **LOMBARD - CONRAD ARCHITECTS, P.C.** is unlawful and subject to criminal prosecution.

STAMP:

100% DD SET NOT FOR CONSTRUCTION

DPW 21535 - IDJC LAUNDRY, KITCHEN & CLINIC REMODEL - JCCN

IDJC - JCC NAMPA DPW PROJECT #21535

CONSULTANT:

MRK	DATE	DESCRIPTION
1	Date 1	Revision 1

JOB N0.: **22003.01**
DATE: **11/30/2022**
DRAWN BY: **TEAM LC**
CHECKED BY: **AT**

PHASE: **100% DESIGN DEVELOPMENT**

FINISH PLAN & ROOM FINISH SCHEDULE

SHEET NO.
A2.3

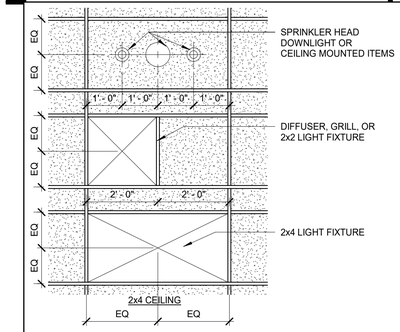

A1 TYP CEILING LAYOUT
1/2" = 1'-0"

NOTE:
SUSPENDED CEILINGS SHALL BE INSTALLED IN ACCORDANCE WITH ASTM C635 AND ASTM C636 FOR CEILINGS INSTALLED IN SEISMIC ZONES 0-2

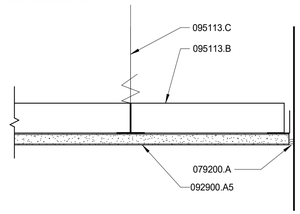

A2 GYP. BRD. CEILING
3" = 1'-0"
CD004-ABC

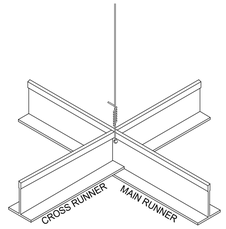

NOTE:
SUSPENDED CEILINGS SHALL BE INSTALLED IN ACCORDANCE WITH ASTM C635 AND ASTM C636 FOR CEILINGS INSTALLED IN SEISMIC ZONES 0-2

B1 BRACING DETAIL
1/8" = 1'-0"
CD002-ABC

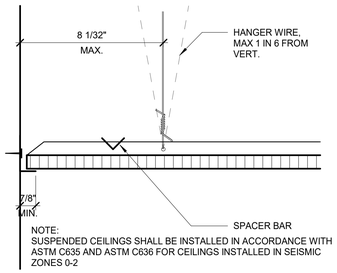

NOTE:
SUSPENDED CEILINGS SHALL BE INSTALLED IN ACCORDANCE WITH ASTM C635 AND ASTM C636 FOR CEILINGS INSTALLED IN SEISMIC ZONES 0-2

C1 ACOUSTICAL CEILING
3" = 1'-0"
CD003-ABC

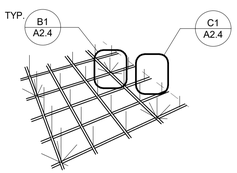

NOTE:
SUSPENDED CEILINGS SHALL BE INSTALLED IN ACCORDANCE WITH ASTM C635 AND ASTM C636 FOR CEILINGS INSTALLED IN SEISMIC ZONES 0-2

SEE **A1/A8.00** FOR TYPICAL CEILING LAYOUT.

D1 SEISMIC BRACING
3" = 1'-0"
CD001-ABC

NOT FOR CONSTRUCTION

D2 REFLECTED CEILING PLAN
1/8" = 1'-0"

CONDOC

079200.A	JOINT SEALANT.
092900.A5	5/8" TYPE X GYPSUM BOARD.
095113.B	METAL SUSPENSION SYSTEM.
095113.C	WIRE HANGER.

KEYNOTES

1. NEW CEILING AND GRID. REFER TO DETAIL **A6/A2.4**.
2. NO CEILING THIS SPACE, OPEN TO STRUCTURE.
3. NEW SUSPENDED GYPSUM BOARD CEILING, SEE DETAIL **A2/A2.4**.
4. CLOSURE AT JAMBS AND HEAD OF OPENING BY FREEZER/COOLER INSTALLER.
5. EXISTING GYPSUM BOARD CEILING TO REMAIN AND BE REPAINTED.
6. EXISTING HOOD TO REMAIN.
7. EXISTING CEILING TO REMAIN IN THIS ROOM.
8. CUT DOWN EXISTING CEILING GRID AND TILES AT NEW FURRED WALL

GENERAL NOTES

1. SEE ROOM FINISH SCHEDULE FOR ADDITIONAL FINISH INFORMATION.
2. PAINT ALL DUCT WORK, CONDUIT, AND PIPING EXPOSED TO VIEW.
3. SEE **A1/A2.4** FOR TYPICAL CEILING LAYOUT.

APPROVAL AREA

LOMBARD CONRAD ARCHITECTS
ARCHITECTURE | PLANNING
INTERIOR DESIGN
472 W. Washington St. | Boise, ID 83702
P 208.345.6677 | F 208.344.9002

COPYRIGHT All rights reserved. Reproduction or use in any form or by any means – graphic, electronic, mechanical, etc. – without written permission of **LOMBARD - CONRAD ARCHITECTS, P.C.** is unlawful and subject to criminal prosecution.

STAMP:

100% DD SET
NOT FOR
CONSTRUCTION

DPW 21535 - IDJC LAUNDRY, KITCHEN & CLINIC REMODEL - JCCN

IDJC - JCC NAMPA DPW PROJECT #21535

CONSULTANT:

MRK	DATE	DESCRIPTION

JOB N0.:	22003.01
DATE:	11/30/2022
DRAWN BY:	TEAM LC
CHECKED BY:	AT
PHASE:	100% DESIGN DEVELOPMENT

REFLECTED CEILING PLAN

SHEET NO.
A2.4

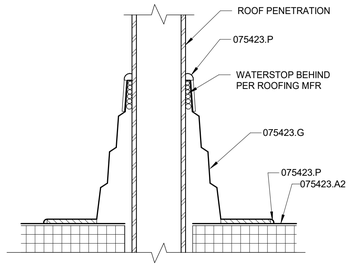

A2 ROOF PENETRATION
3" = 1'-0"

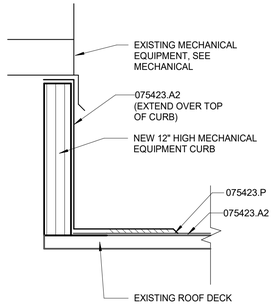

B2 ROOF CURB DETAIL
3" = 1'-0"

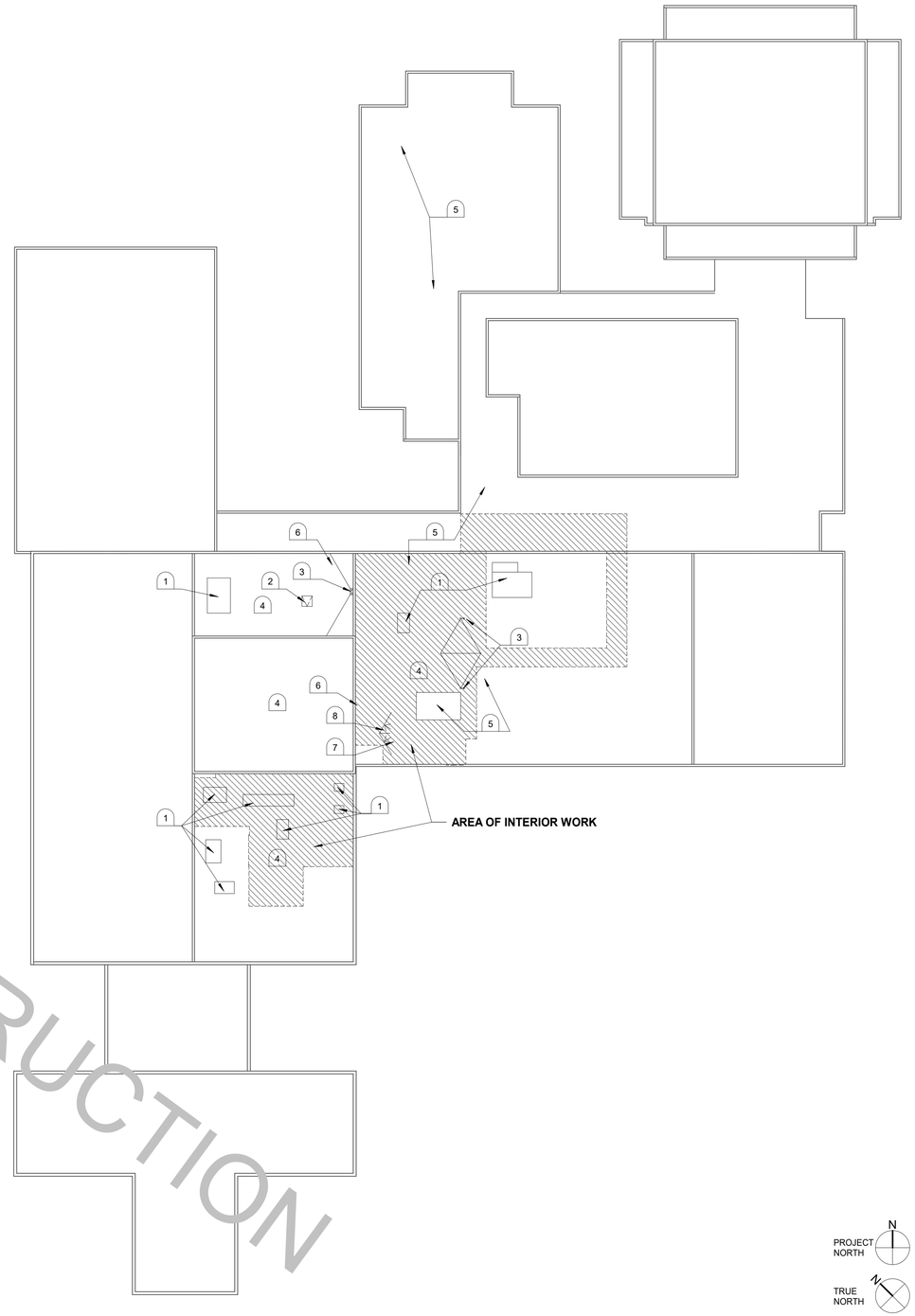

D3 ROOF PLAN
3/64" = 1'-0"

NOT FOR CONSTRUCTION

CONDOC

075423.A2	MECHANICALLY FASTENED TPO ROOFING.
075423.G	PREFORMED CONE AND VENT FLASHING.
075423.P	SEALANT

KEYNOTES

1. EXISTING ROOFTOP EQUIPMENT.
2. EXISTING ROOF ACCESS HATCH.
3. EXISTING ROOF DRAIN.
4. EXISTING ROOF TO REMAIN, PROTECT DURING CONSTRUCTION.
5. NEW GAS PIPPING, SEE MECAHNCIAL.
6. NEW ROOFTOP PIPING PENETRATION, SEE MECAHNCIAL. SEE **A1/A2.5**.
7. NEW RTU, SEE MECAHNCIAL. SEE **B1/A2.5**.
8. CONSTRCUT NEW ROOF CRICKET AT UPHILL SIDE OF NEW RTU.

GENERAL NOTES

1. EXISTING ROOFING MEMBRANE IS TPO.
1. PROVIDE CRICKETS AS REQUIRED FOR POSITIVE DRAINAGE (SLOPE 3/8" P.L.F. WITH FALL LINE OF SLOPE OR 1/4" MIN.). ARROW INDICATES DIRECTION OF ROOF OR CRICKET SLOPE.
2. SEE DETAIL **B1/A2.5** FOR TYPICAL ROOFING MEMBRANE WALL BASE FLASHING DETAIL.
3. PROVIDE WATER TIGHT SEAL AROUND ALL ROOFTOP EQUIPMENT AND PENETRATIONS. INCLUDING THOSE NOT SHOWN HERE. REFER TO MECHANICAL DRAWINGS FOR EQUIPMENT NOT SHOWN HERE.

PROJECT NORTH
TRUE NORTH

APPROVAL AREA

LOMBARD CONRAD ARCHITECTS
ARCHITECTURE | PLANNING
INTERIOR DESIGN
472 W. Washington St. | Boise, ID 83702
P 208.345.6677 | F 208.344.9002

COPYRIGHT All rights reserved. Reproduction or use in any form or by any means – graphic, electronic, mechanical, etc. – without written permission of **LOMBARD - CONRAD ARCHITECTS, P.C.** is unlawful and subject to criminal prosecution.

STAMP:

100% DD SET
NOT FOR
CONSTRUCTION

DPW 21535 - IDJC LAUNDRY, KITCHEN & CLINIC REMODEL - JCCN

IDJC - JCC NAMPA DPW PROJECT #21535

CONSULTANT:

MRK	DATE	DESCRIPTION

JOB N0.:	**22003.01**
DATE:	**11/30/2022**
DRAWN BY:	**TEAM LC**
CHECKED BY:	**AT**

PHASE:	**100% DESIGN DEVELOPMENT**

ROOF PLAN

SHEET NO.

A2.5

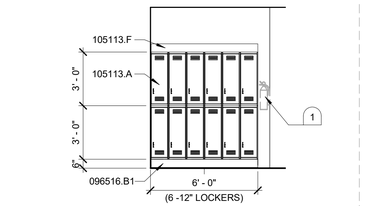

A1 105 - KITCHEN
1/4" = 1'-0"

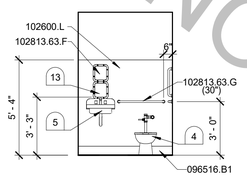

A2 117 - TOILET
1/4" = 1'-0"

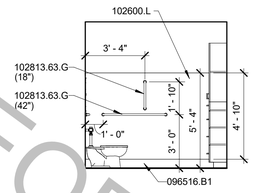

A3 117 - TOILET
1/4" = 1'-0"

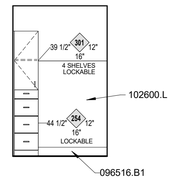

A4 117 - TOILET
1/4" = 1'-0"

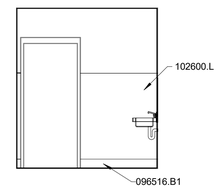

A5 117 - TOILET
1/4" = 1'-0"

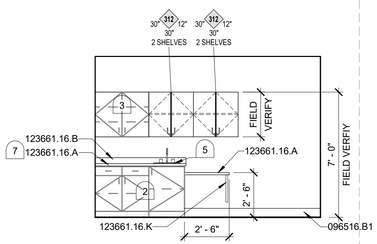

B1 119 - EXAM
1/4" = 1'-0"

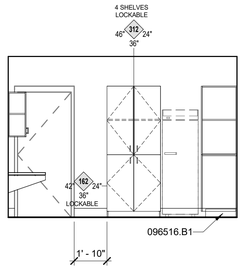

B2 119 - EXAM
1/4" = 1'-0"

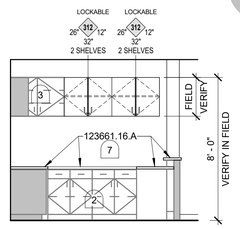

B3 116 - NURSE
1/4" = 1'-0"

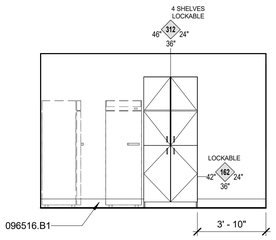

C1 119 - EXAM
1/4" = 1'-0"

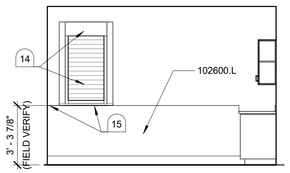

C2 119 - EXAM
1/4" = 1'-0"

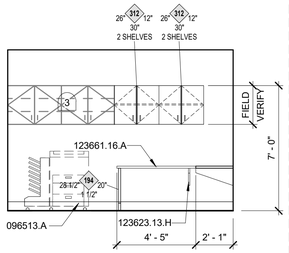

D1 120 - OFFICE
1/4" = 1'-0"

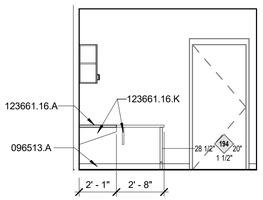

D2 120 - OFFICE
1/4" = 1'-0"

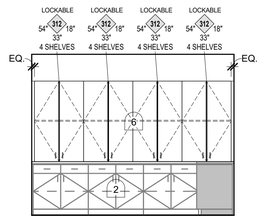

D3 118 - MEDICATION
1/4" = 1'-0"

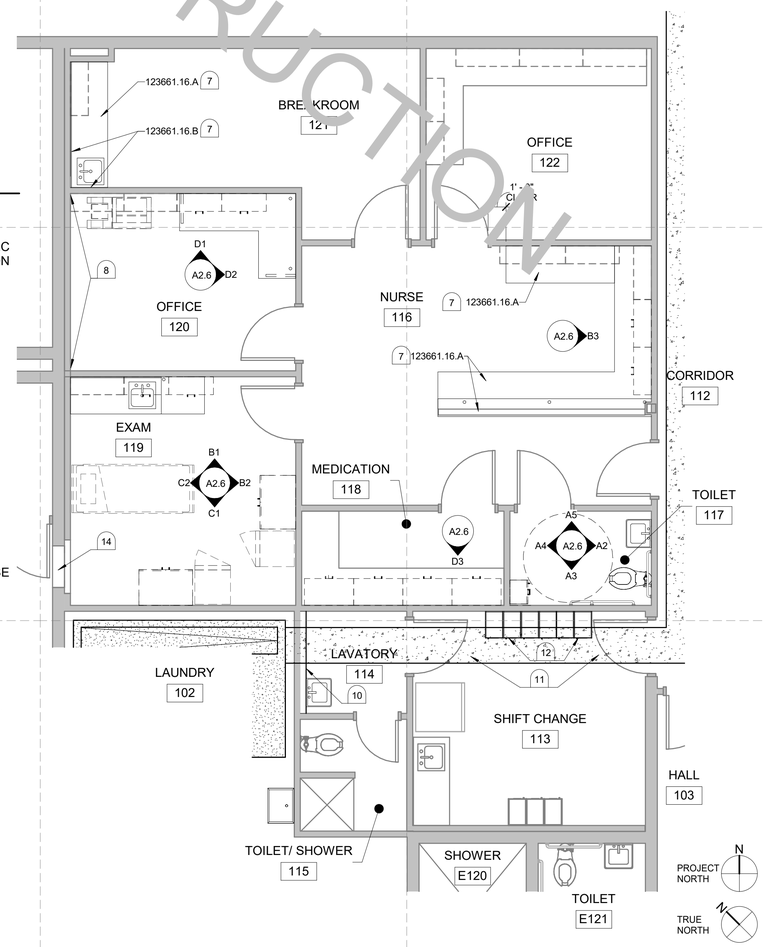

D4 FLOOR PLAN - ENLARGED
1/4" = 1'-0"

CONDOC

096513.A	RESILIENT BASE.
096516.B1	6" INTEGRAL-FLASH-COVE-BASE.
102600.L	IMPACT-RESISTANT WALL COVERING.
102813.63.F	DETENTION MIRROR
102813.63.G	DETENTION GRAB BARS
105113.A	CORRIDOR LOCKER.
105113.F	SLOPING TOP.
123623.13.H	KNEE BRACE.
123661.16.A	SOLID SURFACE COUNTERTOP
123661.16.B	SOLID SURFACE BACKSPLASH
123661.16.K	KNEE BRACE

KEYNOTES

1. PRESERVE AND PROTECT EXISTING K TYPE FIRE EXTINGUISHER TO REMAIN AT THIS LOCATION.
2. PRESERVE AND PROTECT EXISTING BASE CABINETS TO REMAIN.
3. PRESERVE AND PROTECT EXISTING UPPER CABINETS TO REMAIN.
4. NEW TOILET, RE: MECHANICAL DRAWINGS.
5. NEW SINK, RE: MECHANICAL DRAWINGS.
6. INSTALL NEW BASE CABINET ONTOP OF EXISTING TO REMAIN COUNTERTOP.
7. NEW COUNTERTOP OVER EXISTING BASE CABINET TO MATCH EXISTING LENGTH AND DEPTH. RE: FINISH DRAWINGS FOR FINISH MATERIAL.
8. RETAIN AND PROTECT EXISTING MURAL ON THIS WALL.
9. NEW CABINET, SEE ELEVATIONS.
10. INSTALL NEW 3 5/8" STEEL STUD WALL.
11. PATCH BACK SLAB ON GRAGE AND FLOORING IN THIS AREA.
12. REINSTALLTION EXISTING DOUBLE TIER LOCKERS AT THE SAME LOCATION.
13. EXISTING DETENTION MIRROR TO BE REINSTALLED AFTER PAINTING OF WALLS.
14. EXISTING COILING DOOR WITH SILL.
15. ALIGN NEW WALL PROTECTION WITH BOTTOM OF COILING WINDOW SILL.

GENERAL MILLWORK NOTES

1. REFERENCE **NAAWS (NORTH AMERICAN ARCHITECTURAL WOODWORK STANDARDS, CDS VERSION 3.1**, 2017 OR LATER FOR CABINET TYPES AND DESIGNATIONS. NAAWS-CDS.COM
   - 101 / IN / W / D / NOTE
   - NAAWS TYPE: (101)
   - TYPES DENOTED (S): SEE BELOW FOR ADDITIONAL INFORMATION.
   - HEIGHT, WIDTH, DEPTH, RESPECTIVELY.
   - ADDITIONAL INFORMATION.
2. REFER TO SPECIFICATION SECTION 064116.
3. PROVIDE PLASTIC LAMINATE ON EACH EXPOSED SURFACE OF CABINETS, INCLUDING OPEN CABINETS. U.O.N.
4. VERIFY FIELD DIMENSIONS PRIOR TO FABRICATION.
5. CONTINUE BACK SPLASH ALONG BACK OF COUNTERTOP AND SIDES ADJACENT TO WALLS U.O.N..
6. PROVIDE STIFFENERS, BRACING, BACK-UP PLATES, AND ACCESSORIES FOR FRAMING TO SUPPORT CABINETS, ACCESSORIES.

APPROVAL AREA

NOT FOR CONSTRUCTION

LOMBARD CONRAD ARCHITECTS
ARCHITECTURE | PLANNING
INTERIOR DESIGN
472 W. Washington St. | Boise, ID 83702
P 208.345.6677 | F 208.344.9002

COPYRIGHT All rights reserved. Reproduction or use in any form or by any means – graphic, electronic, mechanical, etc. – without written permission of **LOMBARD - CONRAD ARCHITECTS, P.C.** is unlawful and subject to criminal prosecution.

STAMP:

100% DD SET
NOT FOR
CONSTRUCTION

DPW 21535 - IDJC LAUNDRY, KITCHEN & CLINIC REMODEL - JCCN

IDJC - JCC NAMPA DPW PROJECT #21535

CONSULTANT:

MRK	DATE	DESCRIPTION

JOB N0.:	22003.01
DATE:	11/30/2022
DRAWN BY:	TEAM LC
CHECKED BY:	AT

PHASE: 100% DESIGN DEVELOPMENT

INTERIOR ELEVATIONS & ENLARGED PLAN

SHEET NO.

A2.6

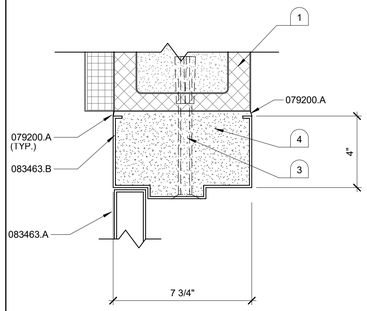

A1 HEAD DETAIL
3" = 1'-0"

PROVIDE MOVEMENT JOINTS AT ALL LOCATIONS WHERE FRAME WALLS MEET ROOF DECKS OR STRUCTURE.

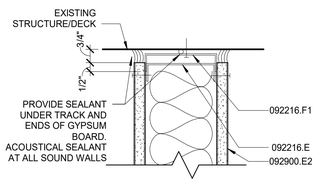

A2 MOVEMENT JOINT
3" = 1'-0"

MOVEMENT JOINT

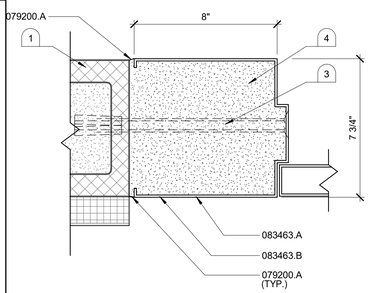

B1 JAMB DETAIL
3" = 1'-0"

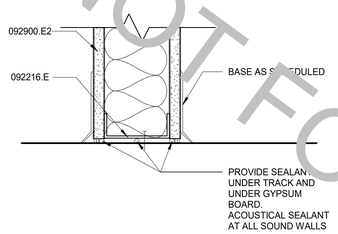

B2 WALL BASE
3" = 1'-0"

WALL BASE

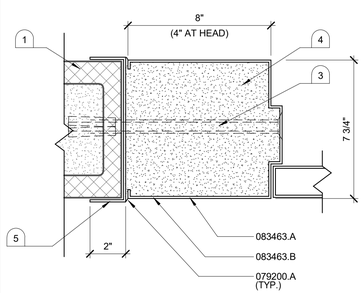

C1 JAMB DETAIL
3" = 1'-0"

(HEAD SIM.)
IDW20

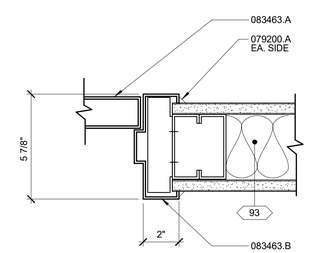

C2 DOOR JAMB
3" = 1'-0"

(HEAD SIM.)

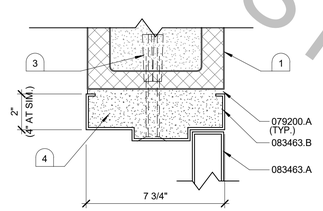

C3 JAMB DETAIL
3" = 1'-0"

(HEAD SIM.)

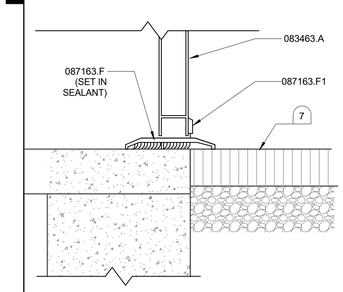

D1 SILL DETAIL
3" = 1'-0"

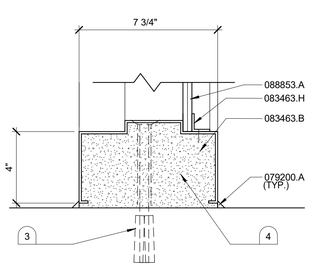

D2 SILL DETAIL
3" = 1'-0"

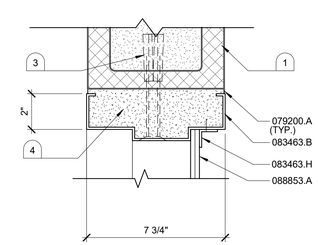

D3 JAMB DETAIL
3" = 1'-0"

(HEAD SIM.)

WALL TYPES LEGEND

INTERIOR

XX.X

WALL MATERIAL
3 - CONCRETE - SPEC. SECTION **033000**
4 - MASONRY - SPEC. SECTION **042000**
5 - LOAD-BEARING METAL STUD - SPEC. SECTION **054000**
6 - WOOD STUD - SPEC. SECTION **061000**
9 - NON-LOAD BEARING METAL STUD - SPEC. SECTION **092216**

NOMINAL WALL WIDTH:

0 = 7/8" FURRING	5 = C-H SHAFT WALL STUD
1 = 1 5/8"	6 = 6" (5 1/2" WOOD)
2 = 2 1/2"	8 = 8" (7 1/4" WOOD)
3 = 3 5/8"	10 = 10"
4 = 4" (3 1/2" WOOD)	12 = 12"

WALL PROPERTIES
C = CEILING HEIGHT WALL
F# = FIRE RATED WALL
REPRESENTS RATING IN HOURS (ie; 93.F1, 93.F2)
P = PARTIAL HEIGHT WALL
S = SOUND WALL

NOTES:
1. REFER TO INDIVIDUAL WALL TYPES FOR ALL INFORMATION:
2. WALL DESIGNATIONS MAY INCLUDE MULTIPLE WALL PROPERTY CHARACTERS.
3. ALL INTERIOR PARTITIONS HAVE GYPSUM BOARD BOTH SIDES TO HEIGHT INDICATED UNLESS NOTED OTHERWISE.
4. ALL INTERIOR WALLS TO HAVE SOUND ATTENUATION BLANKETS.

INTERIOR WALL TYPES
9 SERIES

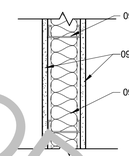

93 **STANDARD WALL**

WALL TO BOTTOM OF DECK ABOVE,

SEE DETAILS **A2.B2**.

STEEL STUDS AT 24" O.C.

PROVIDE SOUND SEALANT AT TOP AND BOTTOM OF WALL AND AT ALL PENETRATIONS. DO NOT INSTALL ELECTRICAL FIXTURES AND OUTLETS BACK TO BACK IN WALL. PROVIDE A MIN. 24" OFFSET.

DOOR SCHEDULE

MARK	SEE DOOR LEGEND											
	1. DOOR OPENING		2. DOOR TYPE	3. DOOR CONST.	4. FACING FINISH	5. GLASS	6. FIRE RATING	7. FRAME TYPE	8. FRAME CONST.	DETAILS - SEE THIS SHEET U.O.N.			9. REMARKS
	WIDTH	HEIGHT								HEAD	JAMB	SILL	
100a	4' - 0"	7' - 0"	FG	SHM	P	SG1	-	3	SHM	A1	B1	D1	-
100b	4' - 0"	7' - 0"	FG	SHM	P	SG1	-	3	SHM	C1 SIM.	C1	-	-
101	3' - 8"	7' - 0"	F	SHM	P	-	-	01	SHM	C2 SIM.	C2	-	-
102	3' - 0"	7' - 0"	F	HM	P	-	-	01	HM	C2 SIM.	C2	-	-
106	3' - 0"	7' - 0"	F	SHM	P	-	-	02	SHM	C3	C3	-	-

DOOR LEGEND

1. DOOR OPENING.
2. SEE DOOR TYPES THIS SHEET.
3. DOOR CONSTRUCTION:
   HM = HOLLOW METAL
   SHM = SECURITY HOLLOW METAL (2")
4. FACING AND FINISH:
   P = PAINTED
5. GLASS: SEE GLAZING TYPES BELOW.
6. FIRE RATING IN MINUTES
7. SEE DOOR FRAME TYPES THIS SHEET
8. FRAME CONSTRUCTION:
   HM = HOLLOW METAL
   SHM = SECURITY HOLLOW METAL
9. REMARKS:
   1. --

DOOR TYPES

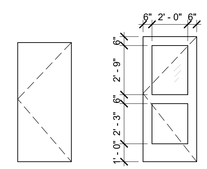

F (SINGLE)
F2 (DOUBLE)

FG

GLAZING TYPES

SG1:
11/16" GLASS CLAD POLYCARBONATE - SECURITY GRADE 3 - 3 PLY (20 MINUTE ATTACK) (SEE SPECIFICATION SECTION **088853**)

GENERAL DOOR NOTES

1. ALL DOORS AND WINDOWS SHALL BE CONSTRUCTED AS DETAILED TO ACTUAL OPENING DIMENSIONS, FIELD VERIFY ALL DIMENSIONS PRIOR TO FABRICATION.
2. REFER TO SPEC SECTIONS **087100** OR **087163** FOR COMPLETE HARDWARE REQUIREMENTS AT EACH GROUP/OPENING.
3. PROVIDE TEMPERED GLASS IN DOORS, WINDOW LIGHTS, AND ADJACENT TO DOOR AND GLAZING WITHIN 36" FROM WALKING SURFACE AND TO MEET ALL OTHER REQUIRMENTS OF IBC SECTION 2406.

FRAME TYPES

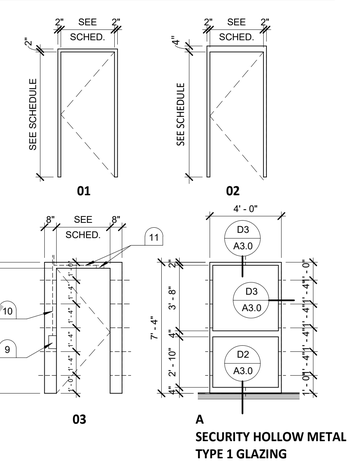

INDICATES POST INSTALLED FRAME ANCHORS AT HEAD OR SILL, SEE DETAILS.

CONDOC

079200.A	JOINT SEALANT.
083463.A	DETENTION DOOR. SEE DOOR SCHEDULE
083463.B	DETENTION FRAME
083463.H	GLAZING STOP
087163.F	THRESHOLD
087163.F1	DOOR BOTTOM
088853.A	SECURITY GLAZING
092216.A	STEEL STUD FRAMING.
092216.E	STEEL STUD TRACK / RUNNER.
092216.F1	DEFLECTION TRACK.
092900.E2	5/8" TYPE X ABUSE-RESISTANT GYPSUM BOARD.
092900.N	SOUND ATTENUATION BLANKETS.

KEYNOTES

1. EXISTING WALL 8" CMU WALL.
2. EXISTING EXTERIOR WALL.
3. PROVIDE POST INSTALLED ANCHORS AT HEAD, JAMB AND SILL. ANCHOR WITH 3/8" COUNTERSUNK FLATHEAD EXPANSION BOLTS WITH PIPE SLEEVE SPACERS. FILL DIMPLE AT FRAME AND SAND SMOOTH.
4. GROUT FRAME SOILD.
5. 1/4" BENT PLATE CLOSURE AT JAMBS AND HEAD OF NEW OPENING IN EXISTING 8" CMU WALL.
6. EXPOSED TOP OF EXISITING FOUNDATION TO BE GROUND SMOOTH TO RECEIVE NEW FLOORING.
7. EXISTING ASPHALT PAVING TO REMAIN.
8. LINE OF EXISTING EXTERIOR CMU/EIFS WALL TO BE REMOVED AT NEW DOOR OPENING.
9. DOOR LOCK WHERE OCCURS, SEE HARDWARE SCHEDULE.
10. CONDUIT FOR DOOR LOCK WHERE OCCURS.
11. DOOR POSITION INDICATOR WITH CONDUIT WHERE OCCURS.

APPROVAL AREA

NOT FOR CONSTRUCTION

LOMBARD CONRAD ARCHITECTS
ARCHITECTURE | PLANNING
INTERIOR DESIGN
472 W. Washington St. | Boise, ID 83702
P 208.345.6677 | F 208.344.9002

COPYRIGHT All rights reserved. Reproduction or use in any form or by any means – graphic, electronic, mechanical, etc. – without written permission of **LOMBARD - CONRAD ARCHITECTS, P.C.** is unlawful and subject to criminal prosecution.

STAMP:

100% DD SET
NOT FOR CONSTRUCTION

DPW 21535 - IDJC LAUNDRY, KITCHEN & CLINIC REMODEL - JCCN

IDJC - JCC NAMPA DPW PROJECT #21535

CONSULTANT:

MRK	DATE	DESCRIPTION

JOB N0.:	22003.01
DATE:	11/30/2022
DRAWN BY:	TEAM LC
CHECKED BY:	AT
PHASE:	100% DESIGN DEVELOPMENT

DOOR SCHEDULE & DETAILS

SHEET NO.
A3.0

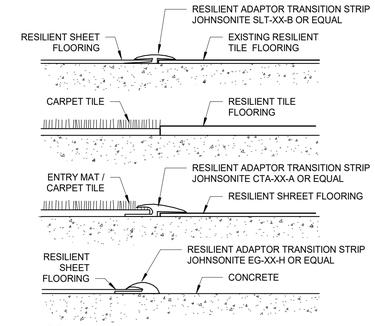

A5 FLOOR TRANSITIONS
12" = 1'-0" ID001

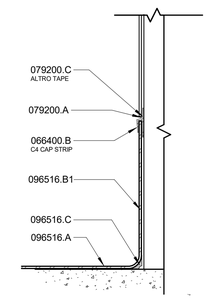

B5 INTEGRAL COVE BASE 1
3" = 1'-0" ID002

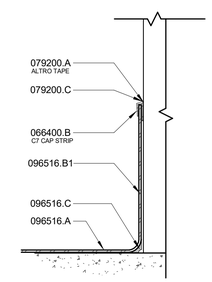

C5 INTERGAL COVE BASE 2
3" = 1'-0" ID003

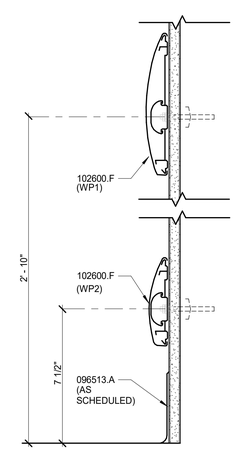

D4 DUAL WALL GUARD
3" = 1'-0" ID005

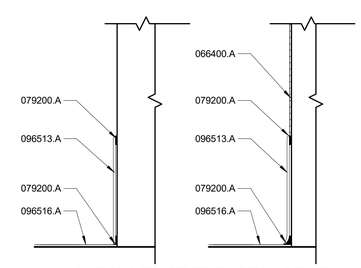

PLACE BEAD OF WATER RESISTANT SEALANT BEHIND BOTTOM EDGE OF RUBBER BASE ALLOWING EXCESS TO SEEP OUT. WIPE EXCESS SEALANT SMOOTH.

D5 RUBBER BASE
3" = 1'-0" ID004

CONDOC

066400.A	PLASTIC SHEET PANELING.
066400.B	TRIM.
079200.A	JOINT SEALANT.
079200.C	BOND BREAKER TAPE.
096513.A	RESILIENT BASE.
096516.A	RESILIENT SHEET FLOORING.
096516.B1	6" INTEGRAL-FLASH-COVE-BASE.
096516.C	COVE STRIP.
102600.F	CHAIR RAIL.

KEYNOTES

1. XXXX

GENERAL NOTES

1. XXXXX

APPROVAL AREA

NOT FOR CONSTRUCTION

LOMBARD CONRAD ARCHITECTS
ARCHITECTURE | PLANNING
INTERIOR DESIGN
472 W. Washington St. | Boise, ID 83702
P 208.345.6677 | F 208.344.9002

COPYRIGHT All rights reserved. Reproduction or use in any form or by any means – graphic, electronic, mechanical, etc. – without written permission of **LOMBARD - CONRAD ARCHITECTS, P.C.** is unlawful and subject to criminal prosecution.

STAMP:

100% DD SET NOT FOR CONSTRUCTION

DPW 21535 - IDJC LAUNDRY, KITCHEN & CLINIC REMODEL - JCCN

IDJC - JCC NAMPA DPW PROJECT #21535

CONSULTANT:

MRK	DATE	DESCRIPTION

JOB N0.:	22003.01
DATE:	11/30/2022
DRAWN BY:	TEAM LC
CHECKED BY:	AT
PHASE:	100% DESIGN DEVELOPMENT

INTERIOR DETAILS

SHEET NO.

A4.0

ELECTRICAL LEGEND - LIGHTING

REFERENCE FIXTURE SCHEDULE FOR MOUNTING TYPE, MOUNTING HEIGHT, AND FIXTURE TYPE.

- DOUBLE FACE EXIT SIGN, CEILING MOUNTED, PROVIDE UNSWITCHED CONDUCTOR.
- WALL MOUNTED DOUBLE FACE EXIT SIGN PROVIDE UNSWITCHED CONDUCTOR. MOUNT AT +8'-0" UNO.
- SINGLE FACE EXIT SIGN, CEILING MOUNTED PROVIDE UNSWITCHED CONDUCTOR.
- WALL MOUNTED SINGLE FACE EXIT SIGN PROVIDE UNSWITCHED CONDUCTOR. MOUNT AT +8'-0" UNO.
- ARROW INDICATES DIRECTION TO BE SHOWN ON SIGN.
- 1'X1' LIGHT FIXTURE.
- 1'X1' LIGHT FIXTURE, PROVIDE EMERGENCY BATTERY BACKUP CONNECTED TO AN UNSWITCHED CONDUCTOR.
- TRACK LIGHT
- 1'X4' LIGHT FIXTURE.
- 1'X4' LIGHT FIXTURE, PROVIDE EMERGENCY BATTERY BACKUP CONNECTED TO AN UNSWITCHED CONDUCTOR.
- 2'X4' LIGHT FIXTURE.
- 2'X4' LIGHT FIXTURE, PROVIDE EMERGENCY BATTERY BACKUP CONNECTED TO AN UNSWITCHED CONDUCTOR.
- 2'X2' LIGHT FIXTURE.
- 2'X2' LIGHT FIXTURE, PROVIDE EMERGENCY BATTERY BACKUP CONNECTED TO AN UNSWITCHED CONDUCTOR.
- DIRECT/INDIRECT LIGHT FIXTURE. SEE SCHEDULE FOR LENGTH.
- DIRECT/INDIRECT LIGHT FIXTURE. SEE SCHEDULE FOR LENGTH. PROVIDE EMERGENCY BATTERY BACKUP CONNECTED TO AN UNSWITCHED CONDUCTOR
- STRIP LIGHT FIXTURE. SEE SCHEDULE FOR LENGTH.
- STRIP LIGHT FIXTURE. SEE SCHEDULE FOR LENGTH. PROVIDE EMERGENCY BATTERY BACKUP CONNECTED TO AN UNSWITCHED CONDUCTOR
- WALL MOUNTED LIGHT FIXTURE.
- WALL MOUNTED LIGHT FIXTURE, PROVIDE EMERGENCY BATTERY BACKUP CONNECTED TO AN UNSWITCHED CONDUCTOR.
- RECESSED LIGHT FIXTURE
- RECESSED LIGHT FIXTURE. PROVIDE EMERGENCY BATTERY BACKUP CONNECTED TO AN UNSWITCHED CONDUCTOR.
- ROUND LIGHT FIXTURE
- ROUND EMERGENCY LIGHT FIXTURE. PROVIDE EMERGENCY BATTERY BACKUP CONNECTED TO AN UNSWITCHED CONDUCTOR.
- WALL MOUNTED LIGHT FIXTURE.
- WALL MOUNTED EMERGENCY LIGHT FIXTURE. PROVIDE EMERGENCY BATTERY BACKUP CONNECTED TO AN UNSWITCHED CONDUCTOR.
- POLE LIGHT 1 HEAD WITH POLE
- TC — TIME CLOCK
- PC — PHOTO CONTROL CELL LOCATED 12" ABOVE ROOF FACING NORTH.
- OS — OCCUPANCY SENSOR. PROVIDE RELAYS AND POWER PACKS AS REQUIRED
- D — LED DRIVER
- EMERGENCY EGRESS LIGHTING WITH OUT FIXTURE HEADS. CONNECT TO AN UNSWITCHED CONDUCTOR.
- EMERGENCY EGRESS LIGHTING. CONNECT TO AN UNSWITCHED CONDUCTOR.
- XXX — INDICATES FIXTURE TYPE. REFER TO FIXTURE SCHEDULE.
- EXTERIOR WALL PACK
- EMERGENCY EXTERIOR WALL PACK. PROVIDE EMERGENCY BATTERY BACKUP CONNECTED TO AN UNSWITCHED CONDUCTOR

DEVICES

- S — SWITCH, TYPE AS INDICATED. +46"AFF
  - 2 DOUBLE POLE
  - 3 3-WAY
  - 4 4-WAY
  - K KEYED
  - P PILOT LIGHT
  - D DIMMER
  - HP HORSEPOWER RATED
  - TO THERMAL OVERLOAD
  - LV LOW VOLTAGE
  - OS OCCUPANCY SENSOR
  - OR LOW VOLTAGE, MOMENTARY OVERRIDE
  - VS VACANCY SENSOR
  - a SUPERSCRIPT INDICATES LIGHTS TO BE SWITCHED TOGETHER
- S — DUAL LEVEL SWITCHING, INSIDE AND OUTSIDE LAMPS OF FIXTURE TO BE SWITCHED SEPARATELY.
- S — DUAL LEVEL SWITCHING WITH OCCUPANCY SENSOR, INSIDE AND OUTSIDE LAMPS OF FIXTURE TO BE SWITCHED SEPARATELY.
- S — OCCUPANCY SENSOR WITH MANUAL DIMMING, SET FOR 50% AUTOMATIC ON, AUTOMATIC OFF, WITH MANUAL DIMMING.
- SINGLE CONVENIENCE OUTLET, +18" AFF UNO
- FLOOR MOUNT SINGLE CONVENIENCE OUTLET
- DUPLEX CONVENIENCE OUTLET, +18" AFF UNO
- FLOOR MOUNT DUPLEX CONVENIENCE OUTLET
- EMERGENCY DUPLEX CONVENIENCE OUTLET, +18" AFF UNO
- SWITCHED DUPLEX CONVENIENCE OUTLET, +18" AFF UNO
- FLOOR MOUNTED SWITCHED DUPLEX CONVENIENCE OUTLET
- USB DUPLEX CONVENIENCE OUTLET, +18" AFF UNO
- USB FOURPLEX CONVENIENCE OUTLET, +18" AFF UNO
- FOURPLEX CONVENIENCE OUTLET. +18"AFF UNO
- FLOOR MOUNT FOURPLEX CONVENIENCE OUTLET
- CONNECTION POINT TO EQUIPMENT SPECIFIED, ELECTRICAL CONTRACTOR TO SUPPLY RACEWAY AND CONDUCTORS AND MAKE FINAL CONNECTION TO EQUIPMENT UNDER THIS SECTION. UNO
- FLOOR MOUNTED CONNECTION POINT, SEE NOTE ABOVE FOR REQUIREMENTS
- FLOOR MOUNTED JUNCTION BOX
- JUNCTION BOX
- WALL MOUNTED PUSH BUTTON, MOUNT AT SWITCH HEIGHT UNO
- HC — WALL MOUNTED PUSH BUTTON, HANDICAPPED MOUNT AT SWITCH HEIGHT UNO
- WALL MOUNTED PUSH BUTTON, MOUNT AT SWITCH HEIGHT UNO
- MOTOR STARTER/CONTACTOR, SIZE/POLES NEMA 1 UNO AS INDICATED
- COMBINATION STARTER AND DISCONNECT, SIZE/POLES, STARTER SIZE AS INDICATED, NEMA 1 UNO
- F — FUSED DISCONNECT SWITCH, SIZE/POLES, FUSE SIZES AS INDICATED, NEMA 1 UNO
- NON-FUSED DISCONNECT SIZE/ POLES AS INDICATED, NEMA 1 UNO
- T X-X — THERMOSTAT, +46" AFF PROVIDE CONDUIT, J-BOX, CONDUCTORS AS REQUIRED TO CONTROL ASSOCIATED UNITS. UNO COORDINATE WITH MECHANICAL CONTRACTOR.
- POWER POLE - DUAL CHANNEL
- T — TRANSFORMER
- PANELBOARD. SEE SCHEDULE FOR TYPE.
- EQUIPMENT CABINET, SURFACE MOUNTED
- EQUIPMENT CABINET FLUSH MOUNTED
- SURFACE MULTI-OUTLET RACEWAY
- # / # — MECHANICAL EQUIPMENT CALL OUT
- # — KITCHEN EQUIPMENT CALLOUT

NOTE:	THIS IS A STANDARD LIST OF COMMONLY USED ELECTRICAL SYMBOLS. SOME OF THE SYMBOLS SHOWN MAY NOT HAVE BEEN USED IN THIS DRAWING PACKAGE.

ONE LINE

- DELTA WYE TRANSFORMER UNO
- # / PANEL NAME / VOLTAGE / PHASE — PANEL BOARD, SEE SCHEDULE FOR TYPE AND SIZE
- ##A #P — CIRCUIT BREAKER, SIZE AND POLES INDICATED
- ##A #P — FUSE, SIZE AND TYPE INDICATED, PROVIDE FUSE FOR EACH POLE
- ##A #P — INTERRUPTER SWITCH, SIZE AND POLES INDICATED
- ##A #P — FUSED SWITCH, SIZE/POLES AND FUSE SIZE INDICATED
- ##A #P — DRAW OUT CIRCUIT BREAKER, SIZE AND POLES INDICATED
- 125A 3P — INDIVIDUAL BREAKER WITH SHUNT TRIP, SIZE AND POLES INDICATED. NEMA 1 UNO
- 125A 3P — INDIVIDUAL BREAKER, SIZE AND POLES INDICATED. NEMA 1 UNO
- GFP — GROUND FAULT PROTECTION
- TVSS — TRANSIENT VOLTAGE SURGE SUPPRESSION
- Instrip — ADJUSTABLE BREAKER SETTINGS (PER SPECIFICATIONS): 'L'-LONG TIME 'S'-SHORT TIME 'I'-INSTANTANEOUS 'G'-GROUND FAULT 'R'-ENERGY REDUCING MAINTENANCE SWITCH W/STATUS INDICATOR
- GROUND
- ST — SHUNT TRIP COIL
- M — MOTOR
- 100A 3P — DISCONNECT SWITCH, SIZE AND POLES INDICATED. NEMA 1 UNO
- OVERHEAD SERVICE DROP
- GENERATOR SET, MAIN BREAKER SIZE INDICATED
- AUTOMATIC TRANSFER SWITCH (ATS)
- M — METER AND BASE
- N — NEUTRAL
- T — DRY TYPE TRANSFORMER
- PAD MOUNT TRANSFORMER (KEYED NOTED ON ELECTRICAL SITE PLAN)

SECURITY

- CCTV CAMERA POWER SUPPLY
- CCTV SYSTEM POWER SUPPLY
- ADJUSTABLE CAMERA (PAN/TILT/ZOOM)
- FIXED CAMERA
- CAMERA IN OUTDOOR HOUSING
- ADJUSTABLE CAMERA (PAN/TILT/ZOOM) IN OUTDOOR HOUSING
- C — CCTV OUTLET, +18" UNO
- C — CEILING MOUNTED CCTV OUTLET
- K — SECURITY SYSTEM KEYPAD CONTROLLER COORDINATE BOX SIZE AND MUDRING WITH VENDOR
- CR — CARD READER
- M — CEILING MOUNTED MOTION SENSOR
- M +80" — WALL MOUNTED MOTION SENSOR, MOUNTING HEIGHT INDICATED
- PANIC BUTTON - MOUNTED UNDER COUNTER

FIRE ALARM

- F — PULL STATION, +44" AFF WITH PRE-ALARM COVER
- F — FIRE ALARM HORN, +84" AFF UNO
- F 15 — FIRE ALARM STROBE, +84" AFF UNO, STROBE INTENSITY INDICATED. 'C' INDICATES CEILING MOUNTED
- F 15 — FIRE ALARM HORN/STROBE +84" AFF, UNO, STROBE INTENSITY INDICATED. 'C' INDICATES CEILING MOUNTED
- F — FIRE ALARM BELL, +84" AFF UNO. 'C' INDICATES CEILING MOUNTED
- F — FIRE ALARM CHIME, +84" AFF UNO. 'C' INDICATES CEILING MOUNTED
- F 15 — FIRE ALARM CHIME/STROBE, +84" AFF UNO, STROBE INTENSITY INDICATED. 'C' INDICATES CEILING MOUNTED
- F — SPEAKER STROBE, +84" AFF UNO. 'C' INDICATES CEILING MOUNTED
- EOL — END OF LINE RESISTOR
- FS — FLOW SWITCH, PROVIDE MONITOR MODULE AS REQUIRED
- TS — TAMPER SWITCH, PROVIDE MONITOR MODULE AS REQUIRED
- PS — PRESSURE SWITCH, PROVIDE MONITOR MODULE AS REQUIRED
- FSA — FIRE SYSTEM ANNUNCIATOR, FLUSH MOUNTED +54"UNO
- PIV — POST INDICATOR VALVE, PROVIDE MONITOR MODULE AS REQUIRED
- DH — ELECTROMAGNETIC DOOR HOLDER
- R — RELAY
- CM — CONTROL MODULE
- MM — MONITOR MODULE
- FIRE ALARM KNOX BOX
- FIRE ALARM CONTROL PANEL
- NAC EXTENDER PANEL
- F — FIRE/SMOKE DAMPER
- F — LED INDICATOR LIGHT, CEILING MOUNTED UNO
- F T — LED INDICATOR LIGHT WITH TEST SWITCH, CEILING MOUNTED UNO
- SD — DUCT-MOUNTED SMOKE DETECTOR
- F # — SMOKE DETECTOR, CEILING MOUNTED UNO
  - H HEAT
  - I IONIZATION
  - IN IN DUCT
  - P PHOTOELECTRIC
  - R RELAY
  - WG WIRE GUARD PROTECTIVE WIRE GUARD
- BS,BR — BEAM SELECTOR, BEAM RECEIVER

COMMUNICATIONS

- JUNCTION BOX FOR FUTURE TELEPHONE/DATA OUTLET. MOUNT AT 18" A.F.F. UNO. PROVIDE SINGLE-GANG MUD RING WITH BLANK COVER PLATE. PROVIDE 1" CONDUIT TO NEAREST ACCESSIBLE CEILING SPACE.
- #D,#T — TELEPHONE/DATA OUTLET. MOUNT AT 18" A.F.F. UNO. PROVIDE 1" CONDUIT TO NEAREST ACCESSIBLE CEILING. INSTALL QUANTITY OF DATA (#D) AND TELEPHONE (#T) CABLES INDICATED TO THE NEAREST DATA RACK. PROVIDE (2) DATA CABLES IF A CABLE QUANTITY IS NOT INDICATED.
- FLOOR MOUNTED BOX FOR FUTURE TELEPHONE/DATA OUTLET. JUNCTION BOX WITH SINGLE-GANG MUD RING. PROVIDE 1" CONDUIT TO NEAREST ACCESSIBLE CEILING SPACE. PROVIDE BLANK COVER PLATE.
- #D,#T — FLOOR MOUNTED TELEPHONE/DATA OUTLET. PROVIDE 1" CONDUIT TO NEAREST ACCESSIBLE CEILING. INSTALL QUANTITY OF DATA (#D) AND TELEPHONE (#T) CABLES INDICATED TO THE NEAREST DATA RACK. PROVIDE (2) DATA CABLES IF A CABLE QUANTITY IS NOT INDICATED.
- IC — INTERCOM SYSTEM CALL BUTTON. +46" UNO.
- SP — CEILING MOUNTED SPEAKER WITH BACKBOX
- SP — WALL MOUNTED SPEAKER, WITH BACKBOX +80" UNO
- V — VOLUME CONTROL, +46" UNO
- TV — TELEVISION OUTLET, +18" AFF UNO. PROVIDE 1-1/4" CONDUIT TO NEAREST ACCESSIBLE CEILING SPACE
- TV — CEILING MOUNTED TELEVISION OUTLET
- TTB — TELEPHONE TERMINAL BOARD
- CT-XX — CABLE TRAY, 4" DEEP, WIRE BASKET STYLE, 'XX' INDICATES WIDTH PROVIDE ALL FITTINGS AND SUPPORT HARDWARE REQUIRED

ELECTRICAL ABBREVIATIONS

A	AMPERES
AC	6" ABOVE BACKSPLASH
AFF	ABOVE FINISHED FLOOR
AFG	ABOVE FINISHED GRADE
AF	AMP FRAME
AIC	AMPS INTERRUPTING CAPACITY
AT	AMP TRIP
ATS	AUTOMATIC TRANSFER SWITCH
AWG	AMERICAN WIRE GAUGE
BD	BOTTOM OF DECK
BS	BOTTOM OF STRUCTURE
C	CEILING MOUNTED
C	CONDUIT
CB	CIRCUIT BREAKER
CF	COMPACT FLUORESCENT
CKT	CIRCUIT
CO	CONDUIT ONLY, PROVIDE PULL-LINE
CT	CURRENT TRANSFORMER
CTL	CONTROL
DC	DIRECT CURRENT
(D)	DEMOLITION
DEMO	DEMOLITION
DET	DETAIL
DTT	DOUBLE TWIN TUBE
E	EMERGENCY
(E)	EXISTING
EC	ELECTRICAL CONTRACTOR
EL	EMERGENCY LIGHT
F	FUSE
(F)	FUTURE
FACP	FIRE ALARM CONTROL PANEL
G/GND	GROUND
GFCI	GROUND FAULT CIRCUIT INTERRUPTER
GFI	GROUND FAULT INTERRUPTER
HH	HAND HOLE
HID	HIGH INTENSITY DISCHARGE
HOA	HAND-OFF-AUTO
HPS	HIGH PRESSURE SODIUM
HVAC	HEATING, VENTILATION, & AIR CONDITIONING
IG	ISOLATED GROUND
IPCO	IDAHO POWER COMPANY
J-BOX	JUNCTION BOX
KA	KILOAMP
KVA	KILO VOLT-AMP
KW	KILOWATT
KWH	KILOWATT HOUR
LCP	LIGHTING CONTROL PANEL
MB	MAIN BREAKER
MBR	MAIN CIRCUIT BREAKER
MCC	MOTOR CONTROL CENTER
MDP	MAIN DISTRIBUTION PANEL
MLO	MAIN LUGS ONLY
MMC	MODULAR METERING CENTER
MH	METAL HALIDE
MSB	MAIN SWITCH BOARD
MTG	MOUNTING
N	NEUTRAL
(N)	NEW
NC	NORMALLY CLOSED
NEC	NATIONAL ELECTRICAL CODE
NIC	NOT IN CONTRACT
NL	NIGHT LIGHT
NO	NORMALLY OPEN
NTS	NOT TO SCALE
OH	OVERHEAD
OS	OCCUPANCY SENSOR
P	POLES
PC	PHOTO-CONTROL
PVC	POLYVINYL CHLORIDE
PWR	POWER
REF	REFERENCE
REC	RECEPTACLE
(R)	RELOCATED
SF	SQUARE FEET
TBD	TO BE DETERMINED
TDR	TIME DELAY RELAY
TK	TOE KICK
TP	TWISTED SHIELDED PAIR
TRT	TRIPLE TUBE
TTB	TELEPHONE TERMINAL BOARD
(TYP.)	TYPICAL
UC	UNDER CABINET
UG	UNDERGROUND
U.N.O.	UNLESS NOTED OTHERWISE
V	VOLT
VA	VOLT-AMPERE
W	WATT
WG	WIRE GUARD
WP	WEATHER PROOF/ENCLOSURE
PROVIDED/ PROVIDE BY INSTALLED/ INSTALL	PROVIDE AND INSTALL / PROVIDED AND INSTALLED BY / PROVIDE AND INSTALL
NOTE:	THIS IS A STANDARD LIST OF COMMONLY USED ELECTRICAL ABBREVIATIONS. SOME OF THE ABBREVIATIONS SHOWN ABOVE MAY NOT BE USED IN THIS DRAWING PACKAGE.

ELECTRICAL GENERAL NOTES

A. THESE ELECTRICAL DRAWINGS ARE DIAGRAMMATIC IN NATURE; THEREFORE, THE ELECTRICAL CONTRACTOR SHALL COORDINATE ALL ELECTRICAL EQUIPMENT AND DEVICE LOCATIONS WITH ARCHITECTURAL, MECHANICAL, AND PLUMBING DIVISIONS PRIOR TO ROUGH-IN. REFER TO AND COORDINATE WITH ARCHITECTURAL, MECHANICAL, AND PLUMBING DRAWINGS FOR ADDITIONAL WORK THAT IS REQUIRED BY THE ELECTRICAL CONTRACTOR.

B. ALL CONDUIT AND JUNCTION BOXES ARE TO BE CONCEALED UNLESS LOCATED WITHIN DEDICATED ELECTRICAL OR MECHANICAL ROOMS. USE OF SURFACE MOUNTED RACEWAYS IN ALL OTHER SPACES MUST BE APPROVED BY THE ARCHITECT FOR EACH LOCATION. WHERE SURFACE RACEWAYS ARE APPROVED, UTILIZE WIREMOLD, OR APPROVED EQUAL, SURFACE MOUNTED RACEWAYS PAINTED TO MATCH SURROUNDING WALLS.

C. REFER TO ARCHITECTURAL ELEVATIONS FOR OUTLET HEIGHTS WHERE THE SPECIFIC OUTLET HEIGHT IS NOT INDICATED. REFER TO THE ELECTRICAL LEGEND FOR THE DEFAULT OUTLET HEIGHT WHEN NOT INDICATED ON ELEVATIONS OR ON AT THE DEVICES.

D. PROVIDE PULL-LINE IN ALL EMPTY CONDUITS.

E. TERMINATE ALL LOW-VOLTAGE CONDUITS WITH INSULATED THROAT BUSHING.

F. MECHANICAL EQUIPMENT INDICATED IS SHOWN IN AN APPROXIMATE LOCATION. COORDINATE EXACT LOCATION WITH MECHANICAL CONTRACTOR PRIOR TO ROUGH-IN.

G. ALL NON-LOCKING, 120-V, 15 AND 20-AMP RECEPTACLES SHALL BE LISTED TAMPER-RESISTENT RECEPTACLES PER NEC 406.12

FIRE ALARM:

H. INSTALL PLENUM RATED FIRE ALARM CONDUCTORS FROM ALL FIRE ALARM DEVICES INDICATED TO THE FIRE ALARM CONTROL PANEL OR NAC EXTENDER PANEL(S) AS REQUIRED. STUB 3/4" CONDUIT FROM DEVICE TO VOID ABOVE CEILING. PROVIDE NAC EXTENDER PANELS (QUANTITY AS REQUIRED) IN LOCATIONS INDICATED AND CIRCUITING AS REQUIRED FOR A COMPLETE INSTALLATION. CIRCUIT THE FIRE ALARM NOTIFICATION AND INITIATION DEVICES PER THE ELECTRICAL SPECIFICATIONS. FURNISH AND INSTALL ALL APPURTENANCES AND PROGRAMMING REQUIRED FOR A COMPLETE AND OPERATIONAL SYSTEM. REFER TO ELECTRICAL FIRE ALARM SPECIFICATIONS FOR SYSTEM REQUIREMENTS AND SUBMITTAL PROCEDURES.

DEMO:

I. THE ELECTRICAL DEMOLITION DRAWING(S) PROVIDED ARE INTENDED TO ASSIST THE ELECTRICAL CONTRACTOR IN ESTABLISHING AREAS REQUIRING DISCONNECTION, REMOVAL, OR RELOCATION OF ELECTRICAL EQUIPMENT, OUTLETS, WIRING, DEVICES, FIXTURES, ETC. AND MAY NOT INDICATE ALL DEVICES OR THE FULL EXTENT OF DEMOLITION AND RECONNECTION WHICH MAY BE REQUIRED. THE ELECTRICAL CONTRACTOR SHALL VISIT THE JOB SITE AND THOROUGHLY EXAMINE ALL REQUIRED DEMOLITION WORK AND INCLUDE ALL LABOR AND INCIDENTALS THAT WILL BE NECESSARY TO PERFORM DEMOLITION RECONNECTION AND TEMPORARY POWER CONNECTIONS IN THE BID.

J. ALL ELECTRICAL DEVICES AND WALLS INDICATED ON THE ELECTRICAL DEMOLITION DRAWING(S) ARE TO REMAIN UNLESS OTHERWISE NOTED.

MUSGROVE ENGINEERING, P.A.
234 S. Whispenwood Way
Boise, ID 83709
208.384.0585
645 West 25th Street
Idaho Falls, ID 83402
208.523.2862
www.musgrovepa.com
PROJECT NO. 22-059

LOMBARD CONRAD ARCHITECTS
ARCHITECTURE | PLANNING
INTERIOR DESIGN
472 W. Washington St. | Boise, ID 83702
P 208.345.6677 | F 208.344.9002

COPYRIGHT All rights reserved. Reproduction or use in any form or by any means – graphic, electronic, mechanical, etc. – without written permission of LOMBARD - CONRAD ARCHITECTS, P.C. is unlawful and subject to criminal prosecution.

STAMP:

PRELIMINARY
NOT FOR CONSTRUCTION
11/30/2022

DPW 21535 - IDJC LAUNDRY & KITCHEN REMODEL - JCCN

IDAHO DPW - IDJC

CONSULTANT:

MRK	DATE	DESCRIPTION

JOB N0.:	22003.01
DATE:	08/03/22
DRAWN BY:	Author
CHECKED BY:	Checker
PHASE:	100% DESIGN DEVELOPMENT

ELECTRICAL COVER SHEET

SHEET NO.

E0.0

NOT FOR CONSTRUCTION

MUSGROVE
ENGINEERING, P.A.
234 S. Whispersweet Way
Boise, ID 83709
208.384.0585
645 West 25th Street
Idaho Falls, ID 83402
208.523.2862
www.musgrovepa.com
PROJECT NO. 22-059

NOT FOR CONSTRUCTION

ENERGY CODE COMMISSIONING COMPLIANCE NOTES

SECTION 408 SYSTEM COMMISSIONING

IT SHALL BE THE ELECTRICAL CONTRACTOR'S RESPONSIBILITY TO PROVIDE ALL BELOW NOTED DOCUMENTS WITHIN 90 DAYS OF CERTIFICATE OF OCCUPANCY:

A. AS-BUILT DRAWINGS - DRAWINGS SHALL INCLUDE THE LOCATION AND PERFORMANCE DATA OF ALL PIECES OF MECHANICAL EQUIPMENT.

B. OPERATING AND MAINTENANCE MANUALS- MANUALS SHALL INCLUDE THE FOLLOWING:

1. SUBMITTAL DATA ON ALL PIECES OF EQUIPMENT REQUIRING MAINTENANCE.
2. MANUFACTURER'S OPERATIONS AND MAINTENANCE DATA ON ALL PIECES OF EQUIPMENT. ROUTINE MAINTENANCE ACTIONS SHALL BE CLEARLY IDENTIFIED.
3. NAME AND ADDRESS AND PHONE NUMBER OF OF AT LEAST ONE (1) SERVICE PROVIDED.
4. LIGHTING CONTROL SYSTEMS MAINTENANCE AND CALIBRATION INFORMATION INCLUDING WIRING DIAGRAMS, EQUIPMENT AND SYSTEM SCHEMATICS, AND CONTROL SEQUENCES OF OPERATIONS. DESIRED OR FIELD DETERMINED SETPOINTS SHALL BE PERMANENTLY RECORDED ON CONTROL DRAWINGS AT ALL CONTROL DEVICES, OR FOR DIGITAL CONTROL SYSTEMS, IN THE SYSTEM PROGRAMMING INSTRUCTIONS.
5. A NARRATIVE ON HOW EACH LIGHTING SYSTEM IN INTENDED TO OPERATE, INCLUDING RECOMMENDED SETPOINTS.

C. LIGHTING SYSTEM FUNCTIONAL TESTING REQUIREMENTS

FUNCTIONAL TESTING - ALL AUTOMATIC LIGHTING CONTROL SYSTEM SHALL BE FULLY TESTED TO ENSURE THE CONTROL HARDWARE AND SOFTWARE ARE CALIBRATED, ADJUSTED, P[ROGRAMMED, AND IN PROPER WORKING CONDITION IN ACCORDANCE WITH THE CONSTRUCTION DOCUMENTS AND MANUFACTURER'S INSTALLATION INSTRUCTIONS.

WHERE OCCUPANT SENSORS, TIME SWITCHES, PROGRAMMABLE CONTROLS, PHOTOSENSORS OR DAYLIGHTING CONTROLS ARE INSTALLED, THE FOLLOWING PROCEDURES SHALL BE PREFORMED:

1. CONFIRM THAT THE PLACEMENT, SENSITIVITY AND TIME-OUT ADJUSTMENTS FOR OCCUPANT SENSORS YIELD ACCEPTABLE PERFORMANCE.
2. CONFIRM THAT THE TIME SWITCHES AND PROGRAMMABLE SCHEDULE CONTROLS ARE PROGRAMMED TO TURN THE LIGHTS OFF.
3. CONFIRM THAT THE PLACEMENT AND SENSITIVITY ADJUSTMENTS FOR PHOTOSENSOR CONTROLS REDUCE ELECTRIC LIGHT BASED ON THE AMOUNT OF USABLE DAYLIGHT IN THE SPACE AS SPECIFIED.

D. FINAL LIGHTING SYSTEM FUNCTIONAL REPORT- A REPORT OF TEST PROCEDURES AND RESULTS IDENTIFIED AS THE "FINAL LIGHTING CONTROL REPORT" SHALL BE DELIVERED TO THE BUILDING OWNER. THE REPORT SHALL INCLUDE THE FOLLOWING:

1. LIST OF FUNCTIONAL TESTS USED DURING THE COMMISSIONING PROCESS ON EACH PIECE OF EQUIPMENT.
2. RESULTS OF ALL FUNCTIONAL TESTS ON ALL PIECES OF EQUIPMENT.
3. LIST OF DEFICIENCIES FOUND AND CORRESPONDING CORRECTIVE MEASURES EITHER IMPLEMENTED OR PROPOSED ON EACH PIECE OF EQUIPMENT.
4. LIST OF EQUIPMENT NOT ABLE TO BE FUNCTIONALLY TESTED DUE TO CURRENT CLIMATE CONDITIONS. THESE PIECES OF EQUIPMENT WILL FUNCTIONALLY TESTED ONCE CLIMATE CHANGES ALLOW.

LOMBARD
CONRAD
ARCHITECTS
ARCHITECTURE | PLANNING
INTERIOR DESIGN
472 W. Washington St. | Boise, ID 83702
P 208.345.6677 | F 208.344.9002

COPYRIGHT All rights reserved. Reproduction or use in any form or by any means – graphic, electronic, mechanical, etc. – without written permission of **LOMBARD - CONRAD ARCHITECTS, P.C.** is unlawful and subject to criminal prosecution.

STAMP:

PRELIMINARY
NOT FOR CONSTRUCTION
11/30/2022

DPW 21535 - IDJC LAUNDRY & KITCHEN REMODEL - JCCN

IDAHO DPW - IDJC

CONSULTANT:

MRK	DATE	DESCRIPTION

JOB N0.:	**22003.01**
DATE:	**08/03/22**
DRAWN BY:	**Author**
CHECKED BY:	**Checker**

PHASE: **100% DESIGN DEVELOPMENT**

ELECTRICAL ENERGY COMPLIANCE

SHEET NO.

E0.1

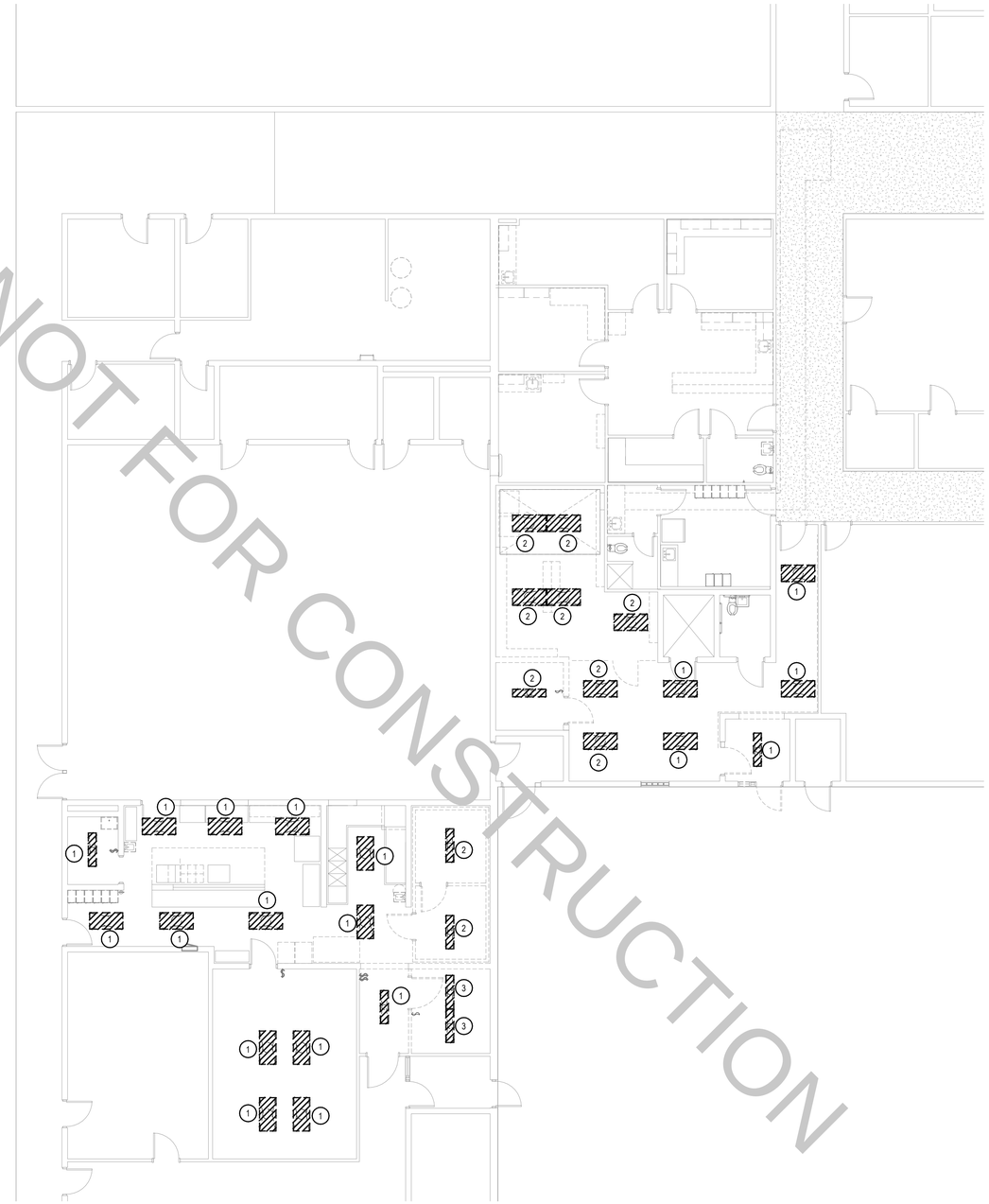

1 ELECTRICAL DEMOLITION PLAN
1/8" = 1'-0"

KEYED NOTES:

(#) SYMBOL USED FOR CALLOUT

1. REMOVE EXISTING LIGHT FIXTURE. MAINTAIN AND PROTECT THE EXISTING CIRCUIT IN THIS AREA FOR RECONNECTION TO NEW FIXTURE. REFER TO LIGHTING PLAN.
2. REMOVE EXISTING LIGHT FIXTURE. MAINTAIN EXISTING CIRCUIT FOR EXTENSION TO NEW FIXTURES IN THIS AREA. REFER TO NEW WORK PLAN.
3. REMOVE EXISTING LIGHT FIXTURE. REMOVE CONDUIT AND CONDUCTORS BACK TO NEAREST DEVICE TO REMAIN.

PROJECT NORTH
TRUE NORTH

MUSGROVE ENGINEERING, P.A.
234 S. Whispersweet Way
Boise, ID 83709
208.384.0585
645 West 25th Street
Idaho Falls, ID 83402
208.523.2862
www.musgrovepa.com
PROJECT NO. 22-059

LOMBARD CONRAD ARCHITECTS
ARCHITECTURE | PLANNING
INTERIOR DESIGN
472 W. Washington St. | Boise, ID 83702
P 208.345.6677 | F 208.344.9002

COPYRIGHT All rights reserved. Reproduction or use in any form or by any means – graphic, electronic, mechanical, etc. – without written permission of **LOMBARD - CONRAD ARCHITECTS, P.C.** is unlawful and subject to criminal prosecution.

STAMP:

PRELIMINARY
NOT FOR CONSTRUCTION
11/30/2022

DPW 21535 - IDJC LAUNDRY & KITCHEN REMODEL - JCCN

IDAHO DPW - IDJC

CONSULTANT:

MRK	DATE	DESCRIPTION

JOB N0.:	22003.01
DATE:	08/03/22
DRAWN BY:	Author
CHECKED BY:	Checker
PHASE:	100% DESIGN DEVELOPMENT

ELECTRICAL DEMOLITION PLAN

SHEET NO.
E1.0

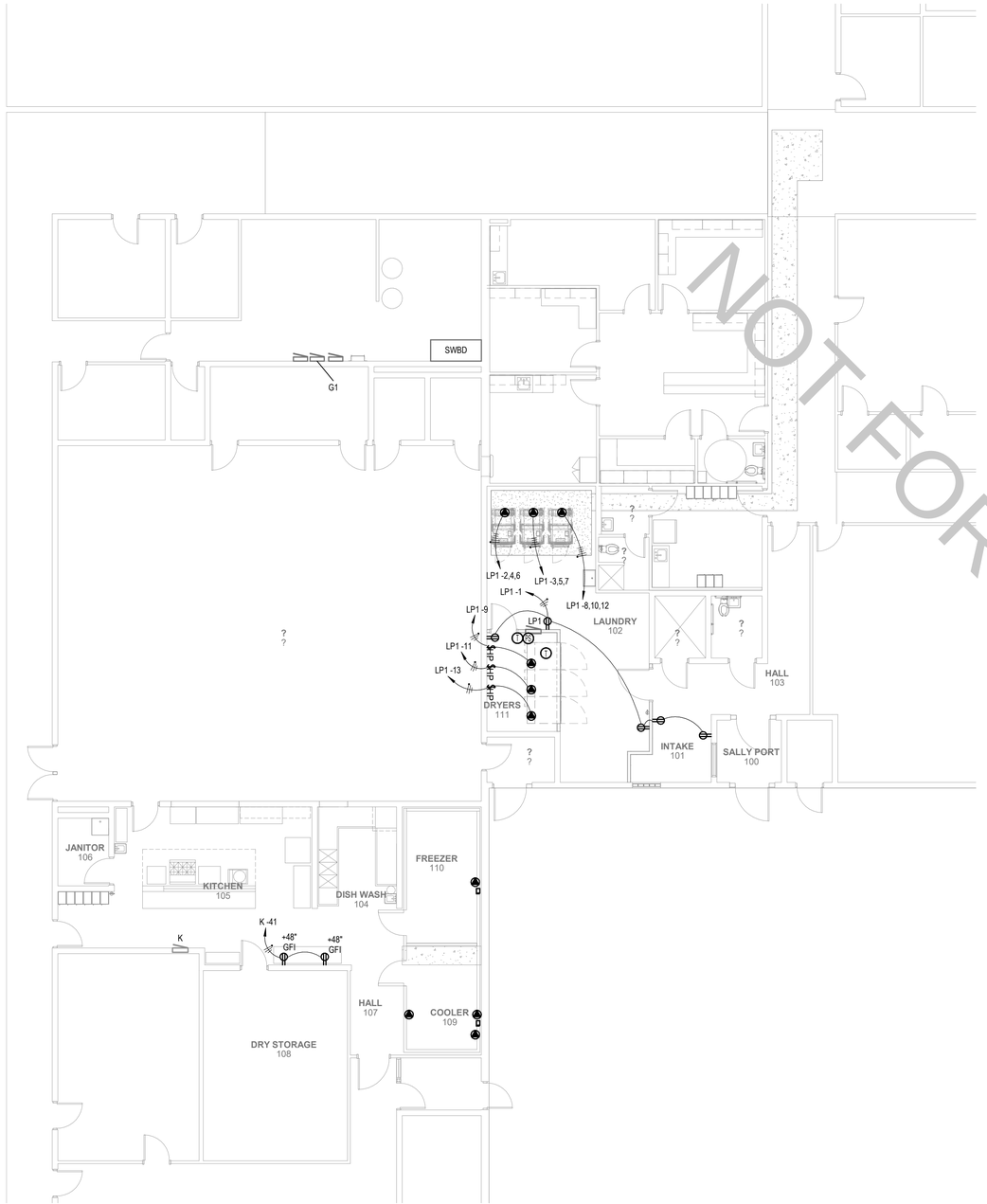

NOT FOR CONSTRUCTION

KEYED NOTES:

(#) SYMBOL USED FOR CALLOUT

PROJECT NORTH

TRUE NORTH

1 POWER PLAN
1/8" = 1'-0"

MUSGROVE ENGINEERING, P.A.
234 S. Whispenwood Way
Boise, ID 83709
208.384.0585
645 West 25th Street
Idaho Falls, ID 83402
208.523.2862
www.musgrovepa.com
PROJECT NO. 22-059

LOMBARD CONRAD ARCHITECTS
ARCHITECTURE | PLANNING
INTERIOR DESIGN
472 W. Washington St. | Boise, ID 83702
P 208.345.6677 | F 208.344.9002

COPYRIGHT All rights reserved. Reproduction or use in any form or by any means – graphic, electronic, mechanical, etc. – without written permission of **LOMBARD - CONRAD ARCHITECTS, P.C.** is unlawful and subject to criminal prosecution.

STAMP:

PRELIMINARY
NOT FOR CONSTRUCTION
11/30/2022

DPW 21535 - IDJC LAUNDRY & KITCHEN REMODEL - JCCN

IDAHO DPW - IDJC

CONSULTANT:

MRK	DATE	DESCRIPTION

JOB N0.:	22003.01
DATE:	08/03/22
DRAWN BY:	Author
CHECKED BY:	Checker
PHASE:	100% DESIGN DEVELOPMENT

POWER PLAN

SHEET NO.

E2.1

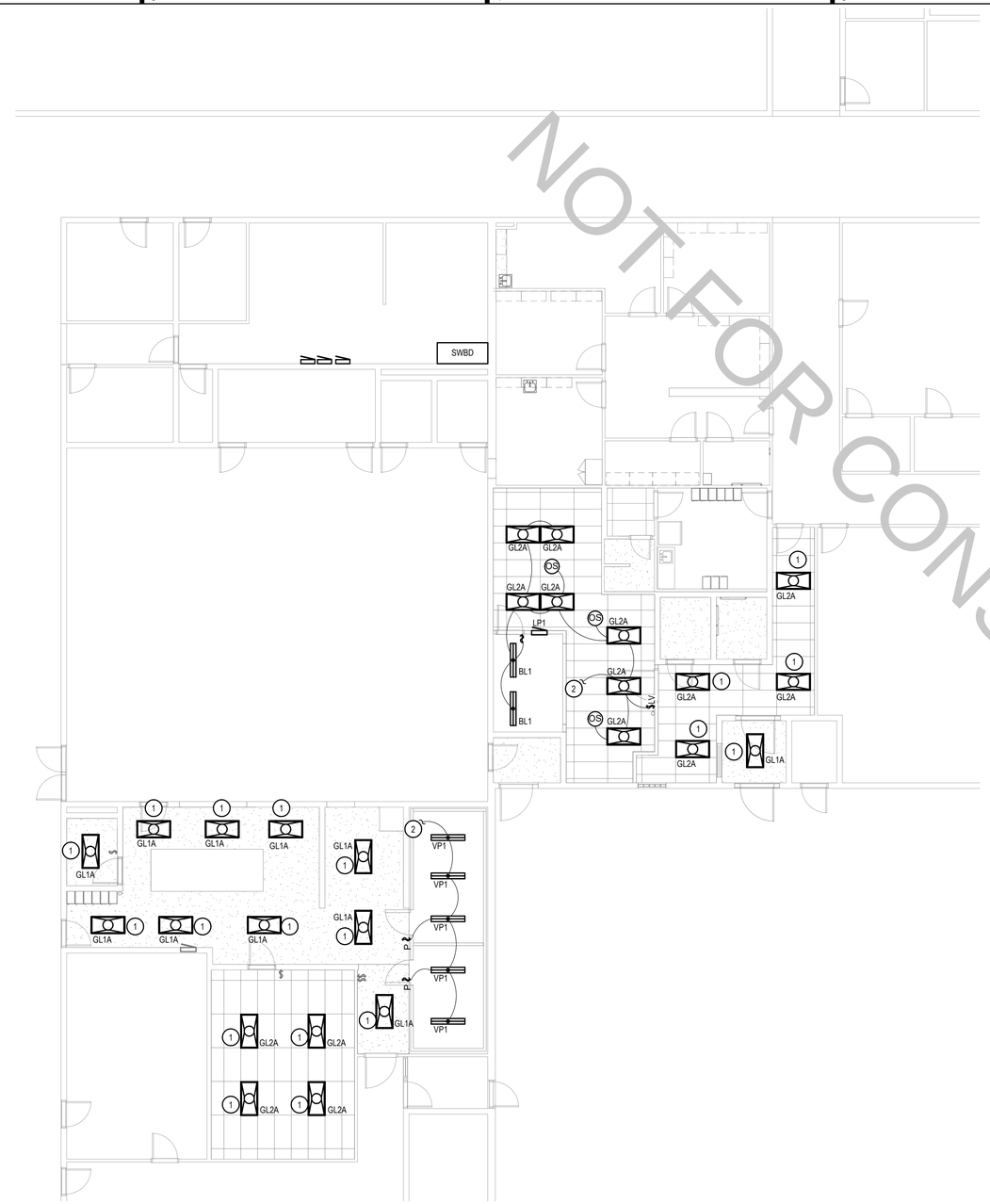

NOT FOR CONSTRUCTION

KEYED NOTES:

(#) SYMBOL USED FOR CALLOUT

1. INSTALL NEW LIGHT FIXTURE IN THE LOCATION OF THE REMOVED FIXTURE. RECONNECT THE FIXTURE TO THE EXISTING CIRCUIT AT THIS LOCATION.
2. INTERCEPT THE EXISTING CIRCUIT LEFT FROM THE REMOVAL OF THE EXISTING FIXTURES IN THIS AREA AND EXTEND TO NEW FIXTURES AS SHOWN. PROVIDE AND INSTALL ALL HARDWARE REQUIRED FOR A COMPLETE INSTALLATION.

PROJECT NORTH

TRUE NORTH

1 LIGHTING PLAN
1/8" = 1'-0"

MUSGROVE ENGINEERING, P.A.
234 S. Whisperwood Way
Boise, ID 83709
208.384.0585
645 West 25th Street
Idaho Falls, ID 83402
208.523.2862
www.musgrovepa.com
PROJECT NO. 22-059

LOMBARD CONRAD ARCHITECTS
ARCHITECTURE | PLANNING
INTERIOR DESIGN
472 W. Washington St. | Boise, ID 83702
P 208.345.6677 | F 208.344.9002

COPYRIGHT All rights reserved. Reproduction or use in any form or by any means – graphic, electronic, mechanical, etc. – without written permission of **LOMBARD - CONRAD ARCHITECTS, P.C.** is unlawful and subject to criminal prosecution.

STAMP:

PRELIMINARY
NOT FOR CONSTRUCTION
11/30/2022

DPW 21535 - IDJC LAUNDRY & KITCHEN REMODEL - JCCN

IDAHO DPW - IDJC

CONSULTANT:

MRK	DATE	DESCRIPTION

JOB N0.:	22003.01
DATE:	08/03/22
DRAWN BY:	Author
CHECKED BY:	Checker
PHASE:	100% DESIGN DEVELOPMENT

LIGHTING PLAN

SHEET NO.
E2.2

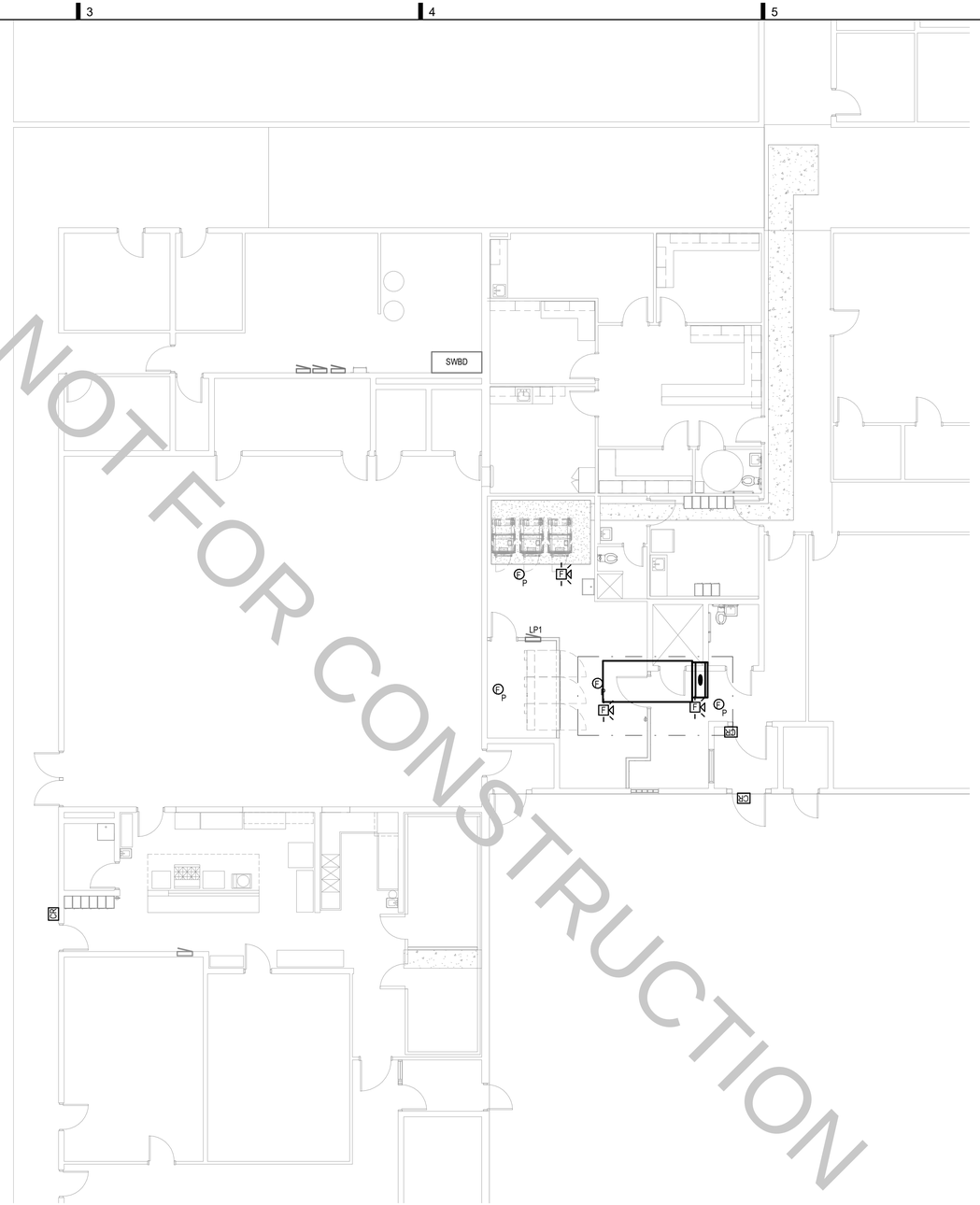

1 SPECIAL SYSTEMS PLAN
1/8" = 1'-0"

PROJECT NORTH
TRUE NORTH

KEYED NOTES:

(#) SYMBOL USED FOR CALLOUT

MUSGROVE ENGINEERING, P.A.
234 S. Whispersweed Way
Boise, ID 83709
208.384.0585
645 West 25th Street
Idaho Falls, ID 83402
208.523.2862
www.musgrovepa.com
PROJECT NO. 22-059

LOMBARD CONRAD ARCHITECTS
ARCHITECTURE | PLANNING
INTERIOR DESIGN
472 W. Washington St. | Boise, ID 83702
P 208.345.6677 | F 208.344.9002

COPYRIGHT All rights reserved. Reproduction or use in any form or by any means – graphic, electronic, mechanical, etc. – without written permission of **LOMBARD - CONRAD ARCHITECTS, P.C.** is unlawful and subject to criminal prosecution.

STAMP:

PRELIMINARY
NOT FOR CONSTRUCTION
11/30/2022

DPW 21535 - IDJC LAUNDRY & KITCHEN REMODEL - JCCN

IDAHO DPW - IDJC

CONSULTANT:

MRK	DATE	DESCRIPTION

JOB N0.:	22003.01
DATE:	08/03/22
DRAWN BY:	Author
CHECKED BY:	Checker

PHASE: 100% DESIGN DEVELOPMENT

SPECIAL SYSTEMS PLAN

SHEET NO.
E2.3

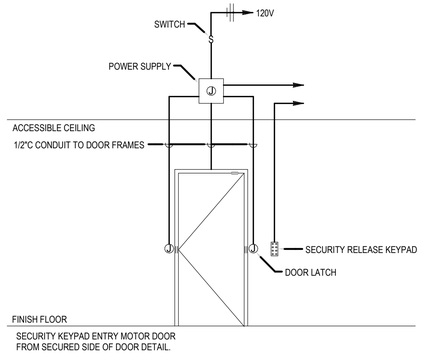

DETAIL GENERAL NOTES:

1. NOT USED

1 CARD READER DOOR DETAIL
NTS

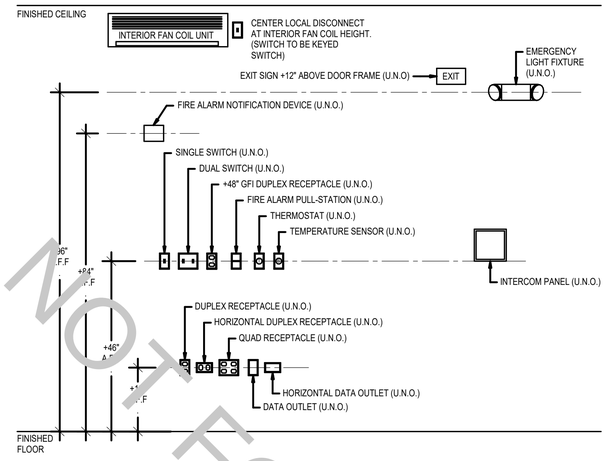

DETAIL GENERAL NOTES:

1. PROVIDE FRAMING AS REQUIRED.

2 STANDARD MOUNTING HEIGHTS
NTS

LIGHTING FIXTURE SCHEDULE

TYPE MARK	DESCRIPTION	MOUNTING	WATTAGE	LAMP	MANUFACTURER	MODEL	EQUAL BY	NOTES
(D)	<varies>	Ceiling Grid	<varies>	<varies>	<varies>	<varies>	LIGHTOLIER/METAL UX/H.E. WILLIAMS	
BL1	4' LED STRIP	Surface	34.8W	34.8W LED, 5189 LUMENS, 3500K	LITHONIA	CLX-L48-5000LM-SEF-L/LENS-MVOLT-EZ1-35K-80CRI-WH	LIGHTOLIER/LITHONIA/H.E. WILLIAMS	
GL1A	SURFACE MOUNTED 2X4 LENSED LED	Ceiling Grid	31.7W	31.7W LED, 4000 LUMENS, 3500K	LITHONIA	2GTL-G-4-48L-EZ1-LP840-2X4SMKSHPPAF	LIGHTOLIER/METAL UX/H.E. WILLIAMS	
GL2A	GRID 2X4 LENSED LED	Ceiling Grid	31.7W	31.7W LED, 4000 LUMENS, 3500K	LITHONIA	2GTL-G-4-48L-EZ1-LP840	LIGHTOLIER/METAL UX/H.E. WILLIAMS	
VP1	4' LED VAPOR PROOF COOLER/FREEZER LIGHT	Surface	34.8W	34.8W LED, 5189 LUMENS, 3500K	LITHONIA	CSVT-48L-4000LM-MVOLT-40K-80CRI-STSL	LIGHTOLIER/LITHONIA/H.E. WILLIAMS	

LIGHTING FIXTURE SCHEDULE NOTES

1 SUBSTITUTIONS WILL BE ALLOWED IF SUBMITTED PRIOR TO BID DATE BY THE GREATER OF 7 BUSINESS DAYS OR THE TIME PERIOD SPECIFIED BY DIVISION 1 SPECIFICATIONS, AND IF DEEMED EQUAL BY THE ENGINEER. THE CONTRACTOR IS RESPONSIBLE FOR ENSURING SUBSTITUTED FIXTURES MEET OR EXCEED THE SPECIFICATIONS OF THE FIXTURES SPECIFIED.

Branch Panel: K

Location: K
Supply From:
Mounting: Recessed
Enclosure: Type 1

Volts: 120/208 Wye
Phases: 3
Wires: 4

A.I.C. Rating:
Mains Type:
Mains Rating: 225 A
MCB Rating:

Notes:

CKT	Circuit Description	Ckt Notes	Trip	Poles	A		B		C		Poles	Trip	Ckt Notes	Circuit Description	CKT
1	(E)DISHWASHER		20 A	1	0 VA	0 VA					1	20 A		(E)ICE MACHINE	2
3	Spare		20 A	1			0 VA	0 VA			3	70 A		(E)KITCHEN UDS	4
5	Spare		20 A	1					0 VA	0 VA	--	--		--	6
7	Spare		60 A	3	0 VA	0 VA					--	--		--	8
9	--		--	--			0 VA	0 VA			2	20 A		(E)TOASTER	10
11	--		--	--					0 VA	0 VA	--	--		--	12
13	(E)RTU HEAT TAPE		20 A	1	0 VA	0 VA					1	20 A		Spare	14
15	(E)SERVICE TABLE HOT FOOD		20 A	2			0 VA	0 VA			1	20 A		(E)REFRIGERATOR	16
17	--		--	--					0 VA	0 VA	1	20 A		(E)KITCHEN FIRE DOORS	18
19	(E)MICROWAVE		20 A	1	0 VA	0 VA					1	20 A		Spare	20
21	(E)MIXER 20 QT		20 A	1			0 VA	0 VA			3	30 A		(E)RTF-1	22
23	Spare		20 A	1					0 VA	0 VA	--	--		--	24
25	(E)REC - SERVICE WORKTABLE		20 A	1	0 VA	0 VA					--	--		--	26
27	(E)REC - KITCHEN		20 A	1			0 VA	0 VA			1	20 A		(E)AVTEC CONTROLS	28
29	(E)FREEZER GFI		20 A	1					0 VA	0 VA	1	20 A		(E)FREEZER LIGHTS	30
31	Spare		20 A	1	0 VA	0 VA					2	30 A		(E)CONDENSER UNIT	32
33	(E)FREEZER FANS		30 A	2			0 VA	0 VA			--	--		--	34
35	--		--	--					0 VA	0 VA	2	20 A		(E)FAN COIL	36
37	(E)FAN COIL		20 A	2	0 VA	0 VA					--	--		--	38
39	--		--	--			0 VA	0 VA			2	30 A		(E)MIXER	40
41	REC - WORK TABLE		20 A	1					360 VA	0 VA	--	--		--	42
				Total Load:	0 VA		0 VA		360 VA						
				Total Amps:	0 A		0 A		3 A						

Legend:

Branch Panel: G1

Location: G1
Supply From:
Mounting: Surface
Enclosure: Type 1

Volts: 120/208 Wye
Phases: 3
Wires: 4

A.I.C. Rating:
Mains Type: LUG
Mains Rating: 225 A
MCB Rating:

Notes:

CKT	Circuit Description	Ckt Notes	Trip	Poles	A		B		C		Poles	Trip	Ckt Notes	Circuit Description	CKT
1	(E)LOAD		20 A	1	600 VA	600 VA					1	20 A		(E)LOAD	2
3	(E)LOAD		20 A	1			600 VA	450 VA			1	20 A		(E)REC - ADMIN CONF RM	4
5	(E)REC - RM 103		20 A	1					360 VA	600 VA	1	20 A		(E)LOAD	6
7	(E)REC - RM 110-112		20 A	1	600 VA	600 VA					1	20 A		(E)REC - RM 118, 120	8
9	(E)REC - RM 114, 109		20 A	1			600 VA	600 VA			1	20 A		(E)REC - RM 114-116	10
11	(E)REC - RM 147, 150, 158		20 A	1					600 VA	600 VA	1	20 A		(E)REC - RM 123, 124, 126	12
13	(E)REC - RM 154, 162		20 A	1	600 VA	600 VA					1	20 A		(E)REC - RM 174, 176, 177	14
15	(E)REC - RM 163		20 A	1			360 VA	600 VA			1	20 A		(E)REC - RM 171, 173	16
17	(E)REC - RM 163		20 A	1					360 VA	600 VA	1	20 A		(E)LOAD	18
19	(E)REC - RM 163		20 A	1	360 VA	360 VA					1	20 A		(E)REC - OLD ENTRY COMPUTER	20
21	(E)REC - RM 163		20 A	1			360 VA	0 VA			1	20 A		Spare	22
23	Spare		20 A	1					0 VA	0 VA	1	20 A		Spare	24
25	Spare		20 A	1	0 VA	0 VA					1	20 A		Spare	26
27	Spare		20 A	1			0 VA	0 VA			1	20 A		Spare	28
29	Spare		20 A	1					0 VA	0 VA	1	20 A		Spare	30
31	Spare		20 A	1	0 VA	0 VA					1	20 A		Spare	32
33	Spare		20 A	1			0 VA	0 VA			1	20 A		Spare	34
35	Spare		20 A	1					0 VA	0 VA	1	20 A		Spare	36
37	Spare		20 A	1	0 VA	0 VA					1	20 A		Spare	38
39	Spare		20 A	1			0 VA	0 VA			1	20 A		Spare	40
41	Spare		20 A	1					0 VA	0 VA	1	20 A		Spare	42
				Total Load:	4320 VA		3570 VA		3120 VA						
				Total Amps:	37 A		30 A		26 A						

Legend:

Branch Panel: LP1

Location: LP1
Supply From:
Mounting: Recessed
Enclosure: Type 1

Volts: 120/208 Wye
Phases:
Wires: 4

A.I.C. Rating:
Mains Type:
Mains Rating: 225 A
MCB Rating:

Notes:

CKT	Circuit Description	Ckt Notes	Trip	Poles	A		B		C		Poles	Trip	Ckt Notes	Circuit Description	CKT
1	REC - LAUNDRY, INTAKE		20 A	1	720 VA	960 VA					3	20 A		WASHING MACHINE 1	2
3	WASHING MACHINE 2		20 A	3			960 VA	960 VA			--	--		--	4
5	--		--	--					960 VA	960 VA	--	--		--	6
7	--		--	--	960 VA	960 VA					3	20 A		WASHING MACHINE 3	8
9			15 A	1			1176 VA	960 VA			--	--		--	10
11	DRYER 2		15 A	1					1176 VA	960 VA	--	--		--	12
13	DRYER 3		15 A	1	1176 VA										14
15															16
17															18
19															20
21															22
23															24
25															26
27															28
29															30
31															32
33															34
35															36
37															38
39															40
41															42
				Total Load:	4776 VA		4056 VA		4056 VA						
				Total Amps:	40 A		34 A		34 A						

Legend:

NOT FOR CONSTRUCTION

MUSGROVE ENGINEERING, P.A.
234 S. Whisperwood Way
Boise, ID 83709
208.384.0585
645 West 25th Street
Idaho Falls, ID 83402
208.523.2862
www.musgrovepa.com
PROJECT NO. 22-059

LOMBARD CONRAD ARCHITECTS
ARCHITECTURE | PLANNING
INTERIOR DESIGN
472 W. Washington St. | Boise, ID 83702
P 208.345.6677 | F 208.344.9002

COPYRIGHT All rights reserved. Reproduction or use in any form or by any means – graphic, electronic, mechanical, etc. – without written permission of **LOMBARD - CONRAD ARCHITECTS, P.C.** is unlawful and subject to criminal prosecution.

STAMP:

PRELIMINARY
NOT FOR CONSTRUCTION
11/30/2022

DPW 21535 - IDJC LAUNDRY & KITCHEN REMODEL - JCCN

IDAHO DPW - IDJC

CONSULTANT:

MRK	DATE	DESCRIPTION

JOB N0.: 22003.01
DATE: 11/30/22
DRAWN BY: Author
CHECKED BY: Checker

PHASE: 100% DESIGN DEVELOPMENT

ELECTRICAL DETAILS / SCHEDULES

SHEET NO.
E3.0

MECHANICAL ABBREVIATIONS

A/C or AC	AIR CONDITIONING	KW	KILOWATT
AFF	ABOVE FINISHED FLOOR	KWH	KILOWATT HOUR
AHU	AIR HANDLING UNIT		
ASHRAE	AMERICAN SOCIETY OF HEATING, REFRIGERATION, AND AIR CONDITIONING ENGINEERS	LAT	LEAVING AIR TEMPERATURE
		LAV	LAVATORY
BTU	BRITISH THERMAL UNITS	LEED	LEADERSHIP IN ENERGY AND ENVIRONMENTAL DESIGN
BTUH	BTUS PER HOUR	LWT	LEAVING WATER TEMPERATURE
CA	COMBUSTION AIR	MAX	MAXIMUM
CC	COOLING COIL	MCA	MINIMUM CIRCUIT AMPS
CFM	AIR FLOW RATE (CUBIC FEET PER MINUTE)	MOCP	MAXIMUM OVERCURRENT PROTECTION
CHWR	CHILLED WATER RETURN	MIN	MINIMUM
CHWS	CHILLED WATER SUPPLY		
CLG	CEILING	NC	NOISE CRITERIA
CW	COLD WATER	NFPA	NATIONAL FIRE PROTECTION ASSOCIATION
		NTS	NOT TO SCALE
DEG or °	DEGREE		
DIA or Ø	DIAMETER	OSA	OUTSIDE AIR
DB	DRY BULB		
		PD	PRESSURE DROP
EA	EXHAUST AIR	PH or Ø	PHASE
EAT	ENTERING AIR TEMPERATURE	PRV	PRESSURE REDUCING VALVE
EER	ENERGY EFFICIENCY RATIO		
ESP	EXTERNAL STATIC PRESSURE	RA	RETURN AIR
EWT	ENTERING WATER TEMPERATURE	RPM	REVOLUTIONS PER MINUTE
		RTU	ROOFTOP UNIT
FCO	FLOOR CLEANOUT		
FD	FIRE DAMPER	SA	SUPPLY AIR
FLA	FULL LOAD AMPS	SEER	SEASONAL ENERGY EFFICIENCY RATIO
FLR	FLOOR	SFD	COMBINATION SMOKE/FIRE DAMPER
FPM	FEET PER MINUTE	SP	STATIC PRESSURE
FT	FEET	SYM	SYMBOL
GA	GAUGE	T & P	TEMPERATURE AND PRESSURE
GCO	GRADE CLEANOUT	TEMP	TEMPERATURE
GPM	WATER FLOW RATE (GALLONS PER MINUTE)	TYP	TYPICAL
HC	HEATING COIL	UMC	UNIFORM MECHANICAL CODE
HP	HORSE POWER	UPC	UNIFORM PLUMBING CODE
HVAC	HEATING, VENTILATING, AIR CONDITIONING	URL	URINAL
HW	HOT WATER		
HWR	HOT WATER RETURN	VTR	VENT THROUGH ROOF
HWS	HOT WATER SUPPLY	V	VOLTS
IBC	INTERNATIONAL BUILDING CODE	W/	WITH
IEEC	INTERNATIONAL ENERGY CONSERVATION CODE	WB	WET-BULB
IFC	INTERNATIONAL FIRE CODE	WC	WATER CLOSET
IFGC	INTERNATIONAL FUEL GAS CODE	WCO	WALL CLEANOUT
IMC	INTERNATIONAL MECHANICAL CODE	WH	WATER HEATER
IPC	INTERNATIONAL PLUMBING CODE		

NOTE: THIS IS A STANDARD LIST OF COMMONLY USED MECHANICAL ABBREVIATIONS. SOME OF THE ABBREVIATIONS SHOWN ABOVE MAY NOT BE USED IN THIS DRAWING PACKAGE.

MECHANICAL GENERAL NOTES

1. ALL MECHANICAL EQUIPMENT AND SYSTEMS SHALL BE INSTALLED IN ACCORDANCE WITH THE INTERNATIONAL MECHANICAL CODE (IMC) LATEST EDITION, AND ALL APPLICABLE LOCAL AND STATE CODES.
2. ALL PLUMBING EQUIPMENT AND SYSTEMS SHALL BE INSTALLED IN ACCORDANCE WITH THE LATEST ADOPTED PLUMBING CODE, AND ALL LOCAL AND STATE CODES.
3. ALL MECHANICAL AND PLUMBING EQUIPMENT SHALL BE INSTALLED PER THE MANUFACTURER'S RECOMMENDATIONS.
4. MECHANICAL CONTRACTORS SHALL RECEIVE PRIOR APPROVAL FROM THE STRUCTURAL ENGINEER BEFORE MAKING CUTS THROUGH ANY STRUCTURAL MEMBER.
5. MECHANICAL CONTRACTORS SHALL COORDINATE INSTALLATION WITH CONSTRUCTION SUPERVISOR AND WITH ALL OTHER TRADES TO AVOID CONFLICTS.
6. THE MECHANICAL CONTRACTORS SHALL VERIFY MOTOR VOLTAGES WITH THE ELECTRICAL DRAWINGS PRIOR TO ORDERING MOTORIZED EQUIPMENT AND CONTROLS.
7. SEE MECHANICAL SCHEDULE SHEET FOR SCHEDULED CAPACITIES OF ALL MECHANICAL EQUIPMENT AND MATERIALS SPECIFIED.
8. DOMESTIC WATER SERVICE IS PROVIDED WITH A DOUBLE-CHECK BACKFLOW PREVENTER ASSEMBLY.
9. THE PLUMBING CONTRACTOR IS RESPONSIBLE FOR ALL BACKFLOW DEVICES TO INSPECTED BY A CERTIFIED BACKFLOW TECHNICIAN BEFORE THE USE OF THE BUILDING POTABLE WATER SYSTEM.
10. ALL MECHANICAL EQUIPMENT TO BE PROPOSED MUST BE ON THE APPROVED LIST PRIOR TO SUBMITTALS. ALL APPROVED MANUFACTURERS MUST BE CAPABLE OF MEETING THE REQUIREMENTS OF THE SPECIFIED EQUIPMENT.
11. RUNOUT AND HOOKUP SIZES TO INDIVIDUAL PLUMBING FIXTURES CAN BE FOUND ON THE PLUMBING FIXTURE SCHEDULE.
12. PROVIDE REMOTE CEILING ACCESS BALANCE DAMPERS WITH CONCEALED CHROME PLATE COVERS FOR BALANCE DAMPERS LOCATED ABOVE HARD CEILINGS.
13. PAINT VTR'S, FLUES, EXHAUST CAPS, AND OTHER MECHANICAL ITEMS ON THE ROOF TO MATCH THE ROOF COLOR.
14. INSULATED FLEXIBLE DUCTWORK--IN LENGTHS OF 6'-0" OR LESS--MAY BE USED FOR RUNOUTS TO AIR TERMINALS.
15. MAINTAIN MINIMUM 10'-0" DISTANCE BETWEEN ALL FRESH AIR INTAKES AND EXHAUST OR GAS FLUE DISCHARGES.
16. LOCATE ACCESS HATCHCES SO AS TO PROVIDE OPTIMUM SERVICEABILITY TO EQUIPMENT AND/OR VALVING. SEE ARCHITECTURAL SPECIFICATION FOR TYPE AND COLOR. COORDINATE LOCATION WITH ARCHITECTURAL, STRUCTURAL, AND LIGHTING.
17. WHENEVER THERE IS A DISCREPANCY BETWEEN THE RUNOUT DUCT SIZE SHOWN ON THE PLANS AND THAT SHOWN IN THE SCHEDULE, ALWAYS USE THE LARGER OF THE TWO DUCT SIZES.
18. THE CONTRACTOR SHALL BE HELD RESPONSIBLE FOR VERIFICATION OF EXISTING JOB CONDITIONS PRIOR TO BID. NO ADDITIONAL COST SHALL BE AWARDED TO THE SUCCESSFUL CONTRACTOR (OR THEIR SUBCONTRACTORS) AFTER BIDS HAVE BEEN SUBMITTED AND CONTRACTS AWARDED FOR FAILURE TO VERIFY EXISTING FIELD CONDITIONS. DISCREPANCIES BETWEEN ACTUAL FIELD CONDITIONS AND CONTRACT DOCUMENTS SHALL BE BROUGHT TO THE ATTENTION OF THE ENGINEER FOR ALTERNATIVE METHODS OF INSTALLATION PRIOR TO THE BIDDING OF THIS PROJECT.
19. UNLESS OTHERWISE NOTED, ALL EXISTING MECHANICAL EQUIPMENT, PIPING, ETC, TO BE REMOVED SHALL BE DISPOSED OF BY THE CONTRACTOR UNDER THIS CONTRACT. THE OWNER SHALL RETAIN THE RIGHT TO KEEP ANY REMOVED ITEMS.
20. ALL DOMESTIC HOT AND COLD WATER LINES IN THE AREA OF WORK WHICH ARE NO LONGER IN USE DUE TO THIS PROJECT SHALL BE REMOVED BACK TO THE MAINS AND CAPPED. NO DEAD LEGS ALLOWED.
21. HOLES IN EXISTING WALLS OR FLOORS SHALL BE PATCHED TO MATCH EXISTING WHERE PIPING, DUCTWORK, ETC, WERE REMOVED OR ADDED DURING THIS PROJECT.
22. DAMAGE TO THE EXISTING FACILITY DURING THE CONSTRUCTION OF THIS PROJECT SHALL BE REPAIRED OR REPLACED BY THE CONTRACTOR AT NO COST THE OWNER.

MECHANICAL AND PLUMBING DRAWINGS LEGEND

	FLEXIBLE DUCTWORK		THREE WAY CONTROL VALVE
	DUCTWORK		TWO WAY CONTROL VALVE
	DUCTWORK BREAK		PRESSURE REDUCING VALVE
	DUCTWORK OR PIPING RISE		GATE VALVE
	CONCENTRIC SQUARE TO ROUND TRANSITION		REDUCER
M	MOTORIZED DAMPER		GLOBE VALVE
	MANUAL VOLUME DAMPER		BALL VALVE
AIRFLOW	SPIN-IN FITTING W/ AIR EXTRACTOR AND HAND DAMPER		BUTTERFLY VALVE
AIRFLOW	HIGH EFFICIENCY FITTING W/ HAND DAMPER		BALANCE VALVE
$	SWITCH		CHECK VALVE
T	THERMOSTAT	FCO	FLOOR CLEANOUT
H	HUMIDISTAT	WCO	WALL CLEANOUT
S	TEMPERATURE SENSOR	GCO	GRADE CLEANOUT
CO2	CARBON DIOXIDE SENSOR		WATER HAMMER ARRESTOR
CO	CARBON MONOXIDE SENSOR		FLOOR DRAIN
NO	NITROUS OXIDE SENSOR		FLOOR SINK
SD	DUCT SMOKE DETECTOR		GAS PRESSURE REGULATOR W/ GAS COCK
	COMBINATION SMOKE/FIRE DAMPER		PRESSURE RELIEF VALVE
	FIRE DAMPER		VENT-THROUGH-ROOF
	SMOKE DAMPER		VENT
#	EQUIPMENT CONNECTION		SOIL, WASTE, OR SANITARY SEWER
	TURNING VANES	AW	ACID WASTE LINE
	INTAKE OR EXHAUST	AV	ACID VENT LINE
	DIRECTION OF AIRFLOW	SD	STORM DRAIN
L-X C-X X"Ø	SUPPLY DIFFUSER	RD	ROOF DRAIN LINE
R-X X"Ø	RETURN GRILLE	OD	OVERFLOW DRAIN LINE
E-X C-X X"Ø	EXHAUST GRILLE	CD	CONDENSATE DRAIN LINE
C-X C-X X"Ø	FLOOR GRILLE		DOMESTIC COLD WATER (CW)
	CEILING EXHAUST FAN		DOMESTIC HOT WATER (HW)
	TEMPERATURE GAUGE		DOMESTIC HOT WATER RETURN (HWR)
	PRESSURE GAUGE (LIQUID FILLED W/ ISOLATION VALVE)	TW	TEMPERED WATER (TW)
TE	TEMPERATURE SENSOR (DUCT OR PIPING)	MPG	MEDIUM PRESSURE NATURAL GAS
FS	FLOW SWITCH	G	LOW PRESSURE NATURAL GAS
	STAINLESS STEEL BRAIDED FLEX CONNECTION	F	FIRE SPRINKLER LINE
	ELASTOMETRIC FLEX CONNECTOR	GWS	GEOTHERMAL WATER SUPPLY
	SUCTION DIFFUSER	GWR	GEOTHERMAL WATER RETURN
	Y TYPE STRAINER (1-1/2" OR LARGER PROVIDED W/ BLOW DOWN VALVE)	CWS	CHILLED WATER SUPPLY
	FLOW DIRECTION	CWR	CHILLED WATER RETURN
	DEMOLITION / EQUIPMENT TO BE REMOVED	CS	CONDENSER WATER SUPPLY
	NEW TO EXISTING CONNECTION POINT	CR	CONDENSER WATER RETURN
(E)	EXISTING	HWS	HEATING WATER SUPPLY
(F)	FUTURE	HWR	HEATING WATER RETURN
(N)	NEW	L	LIQUID REFRIGERANT LINE
	REDUCED PRESSURE BACKFLOW PREVENTER	S	SUCTION REFRIGERANT LINE
	DOUBLE CHECK BACKFLOW PREVENTER		SLOPE PIPE IN DIRECTION OF ARROW
	UNION		PIPE ANCHOR
	AIR VENT		PIPE GUIDE
	TRIPLE DUTY VALVE		CAP

NOTE: THIS IS A LIST OF COMMONLY USED MECHANICAL AND PLUMBING SYMBOLS. SOME OF THE SYMBOLS SHOWN ABOVE MAY NOT BE USED IN THIS DRAWING PACKAGE.

ENERGY CODE COMPLIANCE

A. COMPLIANCE WITH THE LATEST ADOPTED EDITION OF THE INTERNATIONAL ENERGY CONSERVATION CODE IS REQUIRED FOR THIS PROJECT. THESE NOTES COVER MANDATORY REQUIREMENTS OF THE CODE. ADDITIONAL REQUIREMENTS ARE NOTED ON THE DRAWINGS AND IN THE SPECIFICATIONS.

B. MINIMUM REQUIREMENTS FOR SUPPLY AND RETURN DUCTWORK INSULATION:

1. R-6: DUCTS LOCATED IN UNCONDITIONED SPACES (SPACE NEITHER HEATED NOR COOLED SUCH AS ABOVE CEILING SPACES, WALL SPACES, DUCT CHASES, SOFFITS, ATTICS, CRAWL SPACES, UNHEATED BASEMENTS, AND UNHEATED GARAGES).
2. R-12: DUCTS LOCATED OUTSIDE OF THE BUILDING'S INSULATION ENVELOPE (SUCH AS ABOVE THE ATTIC INSULATION).

TYPICAL INSULATION THICKNESS REQUIRED TO MEET THESE REQUIREMENTS:

1. FIBERGLASS DUCT WRAP: R-6, R-12.
2. FIBERGLASS DUCT LINER: R-6, R-12.

C. CONTRACTOR SHALL VERIFY THE R-VALUES OF THE ACTUAL INSULATION USED WITH THE MANUFACTURER. R-VALUES SHALL BE INSTALLED VALUES.

D. WHERE DUCTS USED FOR COOLING ARE EXTERNALLY INSULATED, THE INSULATION SHALL BE COVERED WITH A VAPOR RETARDER HAVING A MAXIMUM PERMEANCE OF 0.05 PERM OR ALUMINUM FOIL HAVING A MINIMUM THICKNESS OF 2 MILS. INSULATION HAVING A PERMEANCE OF 0.05 PERMS OR LESS SHALL NOT BE REQUIRED TO BE COVERED. ALL JOINTS AND SEAMS SHALL BE SEALED TO MAINTAIN THE CONTINUITY OF THE VAPOR RETARDER.

E. ALL DUCT JOINTS, SEAMS, AND CONNECTIONS SHALL BE FASTENED AND SEALED WITH WELDS, GASKETS, ADHESIVES, MASTIC-PLUS-EMBEDDED-FABRIC SYSTEMS, OR TAPES. TAPES AND MASTICS SHALL BE LISTED AND LABELED PER UL181A OR UL181B. DUCT TAPE IS NOT PERMITTED AS A SEALANT ON ANY METAL DUCTS. DUCT CONNECTIONS TO FLANGES OR EQUIPMENT SHALL BE SEALED AND MECHANICALLY FASTENED.

F. DOMESTIC HOT WATER PIPING SYSTEMS SHALL BE INSULATED WITH 1" INSULATION HAVING A CONDUCTIVITY NOT EXCEEDING 0.27 BTU-INCH/HOUR-FT2-°F.

G. DOMESTIC WATER HEATERS WHICH ARE NOT PROVIDED WITH INTEGRAL HEAT TRAPS AND SERVE NONCIRCULATING SYSTEMS SHALL BE PROVIDED WITH HEAT TRAPS ON THE SUPPLY AND DISCHARGE PIPING AT THE WATER HEATER.

H. DOMESTIC HOT WATER SYSTEMS WITH RECIRCULATION PUMPS OR ELECTRIC HEAT TRACE SHALL BE CONTROLLED WITH 7-DAY TIME CLOCKS.

I. AN OPERATING AND MAINTENANCE MANUAL SHALL BE PROVIDED PRIOR TO ISSUANCE OF A CERTIFICATE OF OCCUPANCY. THE O&M MANUAL SHALL CONTAIN THE FOLLOWING INFORMATION AS A MINIMUM:

1. EQUIPMENT CAPACITY (INPUT & OUTPUT).
2. EQUIPMENT OPERATING AND MAINTENANCE INSTRUCTIONS.
3. CONTROL SYSTEM MAINTENANCE AND CALIBRATION INFORMATION, INCLUDING WIRING DIAGRAMS, SCHEMATICS, AND CONTROL SEQUENCES.
4. CONTROL SYSTEM SETPOINTS SHALL BE SHOWN ON CONTROL DRAWINGS, AT CONTROL DEVICES, OR IN PROGRAMMING COMMENT ON DDC SYSTEMS.
5. A COMPLETE WRITTEN NARRATIVE ON HOW EACH MECHANICAL SYSTEM IS INTENDED TO OPERATE.

NOT FOR CONSTRUCTION

MUSGROVE ENGINEERING, P.A.
234 S. Whisperwood Way
Boise, ID 83709
208.384.0585
645 West 25th Street
Idaho Falls, ID 83402
208.523.2862
www.musgrovepa.com
PROJECT NO. 22-059

LOMBARD CONRAD ARCHITECTS
ARCHITECTURE | PLANNING
INTERIOR DESIGN
472 W. Washington St. | Boise, ID 83702
P 208.345.6677 | F 208.344.9002

COPYRIGHT All rights reserved. Reproduction or use in any form or by any means – graphic, electronic, mechanical, etc. – without written permission of LOMBARD - CONRAD ARCHITECTS, P.C. is unlawful and subject to criminal prosecution.

STAMP:

DPW 21535 - IDJC LAUNDRY & KITCHEN REMODEL - JCCN

IDAHO DPW - IDJC

CONSULTANT:

MRK	DATE	DESCRIPTION

JOB N0.:	22003.01
DATE:	08/12/22
DRAWN BY:	AH
CHECKED BY:	BC
PHASE:	100% DESIGN DEVELOPMENT

MECHANICAL COVER SHEET

SHEET NO.

M0.0

MUSGROVE
ENGINEERING, P.A.
234 S. Whisperwood Way
Boise, ID 83709
208.384.0585
645 West 25th Street
Idaho Falls, ID 83402
208.523.2862
www.musgrovepa.com
PROJECT NO. 22-059

NOT FOR CONSTRUCTION

LOMBARD
CONRAD
ARCHITECTS

ARCHITECTURE | PLANNING
INTERIOR DESIGN

472 W. Washington St. | Boise, ID 83702
P 208.345.6677 | F 208.344.9002

COPYRIGHT All rights reserved. Reproduction or use in any form or by any means – graphic, electronic, mechanical, etc. – without written permission of **LOMBARD - CONRAD ARCHITECTS, P.C.** is unlawful and subject to criminal prosecution.

STAMP:

DPW 21535 - IDJC LAUNDRY & KITCHEN REMODEL - JCCN

IDAHO DPW - IDJC

CONSULTANT:

MRK	DATE	DESCRIPTION

JOB N0.:	**22003.01**
DATE:	**08/12/22**
DRAWN BY:	**AH**
CHECKED BY:	**BC**

PHASE:	**100% DESIGN DEVELOPMENT**

MECHANICAL ENERGY COMPLIANCE

SHEET NO.

M0.1

MUSGROVE
ENGINEERING, P.A.
234 S. Whisperwood Way
Boise, ID 83709
208.384.0585
645 West 25th Street
Idaho Falls, ID 83402
208.523.2862
www.musgrovepa.com
PROJECT NO. 22-059

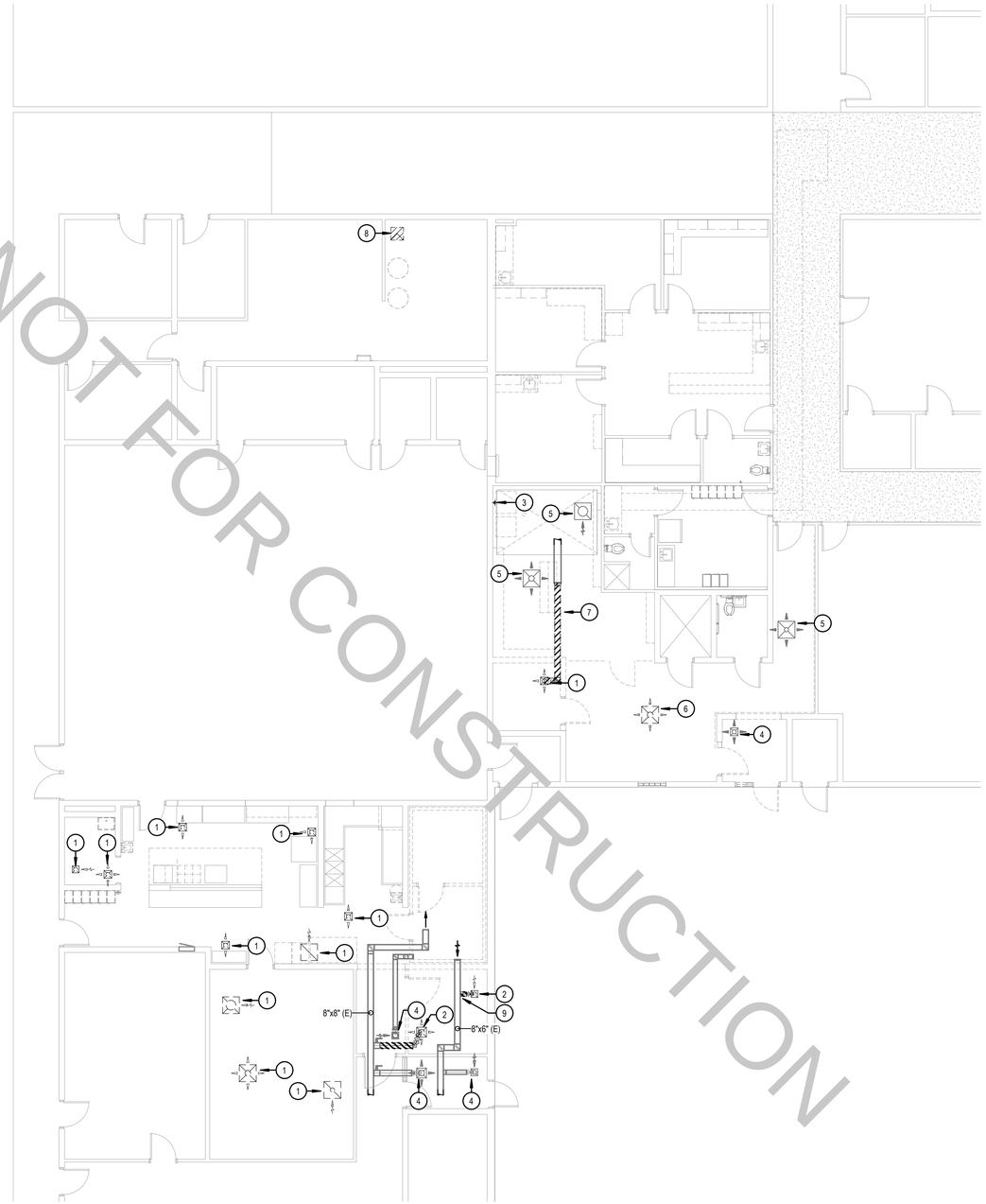

NOT FOR CONSTRUCTION

KEYED NOTES:

(#) SYMBOL USED FOR CALLOUT

1. REMOVE ALL EXISTING DIFFUERS, RETURN AND EXHAUST GRILLES AS SHOWN.
2. REMOVE EXISTING SUPPLY AND EXHAUST GRILLE IN THIS SPACE. REMOVE DUCTING BACK TO MAIN LINES AS SHOWN, SEE NEW PLAN.
3. REMOVE EXISTING DRYER DUCT UP THROUGH ROOF. PATCH ROOF TO MATCH EXISTING.
4. EXISTING GRILLE AND DUCTING TO REMAIN AS-IS.
5. EXISTING DIFFUSER AND RETURN GRILLE TO REMAIN,REMOVE GRILLE FOR PLACEMENT OF NEW CEILING. CLEAN, REPAIR AND PAINT GRILLE TO MATCH NEW DIFFUSERS. SEE NEW WORK PLAN.
6. REMOVE AND RELOCATE EXISTING GRILLE TO NEW LOCATION INSIDE NEW LAUNDRY ROOM. REMOVE EXISTING FLEXIBLE DUCTWORK FROM GRILLE BACK TO BRANCH DUCT.
7. REMOVE PORTION OF EXISTING DUCTWORK AS SHOWN. CAP EXISTING DUCT AT LOCATION OF REMOVED TRANSITION.
8. COMPLETELY REMOVE EXISTING COMBUSTION AIR DUCT FROM ROOF INTO SPACE. PATCH ROOF TO MATCH EXISTING AND MAINTAIN ROOF WARRANTY.
9. CAP BACK AT MAIN. CAP TO BE AIR TIGHT.

PROJECT NORTH
TRUE NORTH

1 DEMO HVAC PLAN
1/8" = 1'-0"

LOMBARD
CONRAD
ARCHITECTS
ARCHITECTURE | PLANNING
INTERIOR DESIGN
472 W. Washington St. | Boise, ID 83702
P 208.345.6677 | F 208.344.9002

COPYRIGHT All rights reserved. Reproduction or use in any form or by any means – graphic, electronic, mechanical, etc. – without written permission of **LOMBARD - CONRAD ARCHITECTS, P.C.** is unlawful and subject to criminal prosecution.

STAMP:

DPW 21535 - IDJC LAUNDRY & KITCHEN REMODEL - JCCN

IDAHO DPW - IDJC

CONSULTANT:

MRK	DATE	DESCRIPTION

JOB N0.:	**22003.01**
DATE:	**08/12/22**
DRAWN BY:	**AH**
CHECKED BY:	**BC**
PHASE:	**100% DESIGN DEVELOPMENT**

HVAC DEMO PLAN

SHEET NO.
M1.0

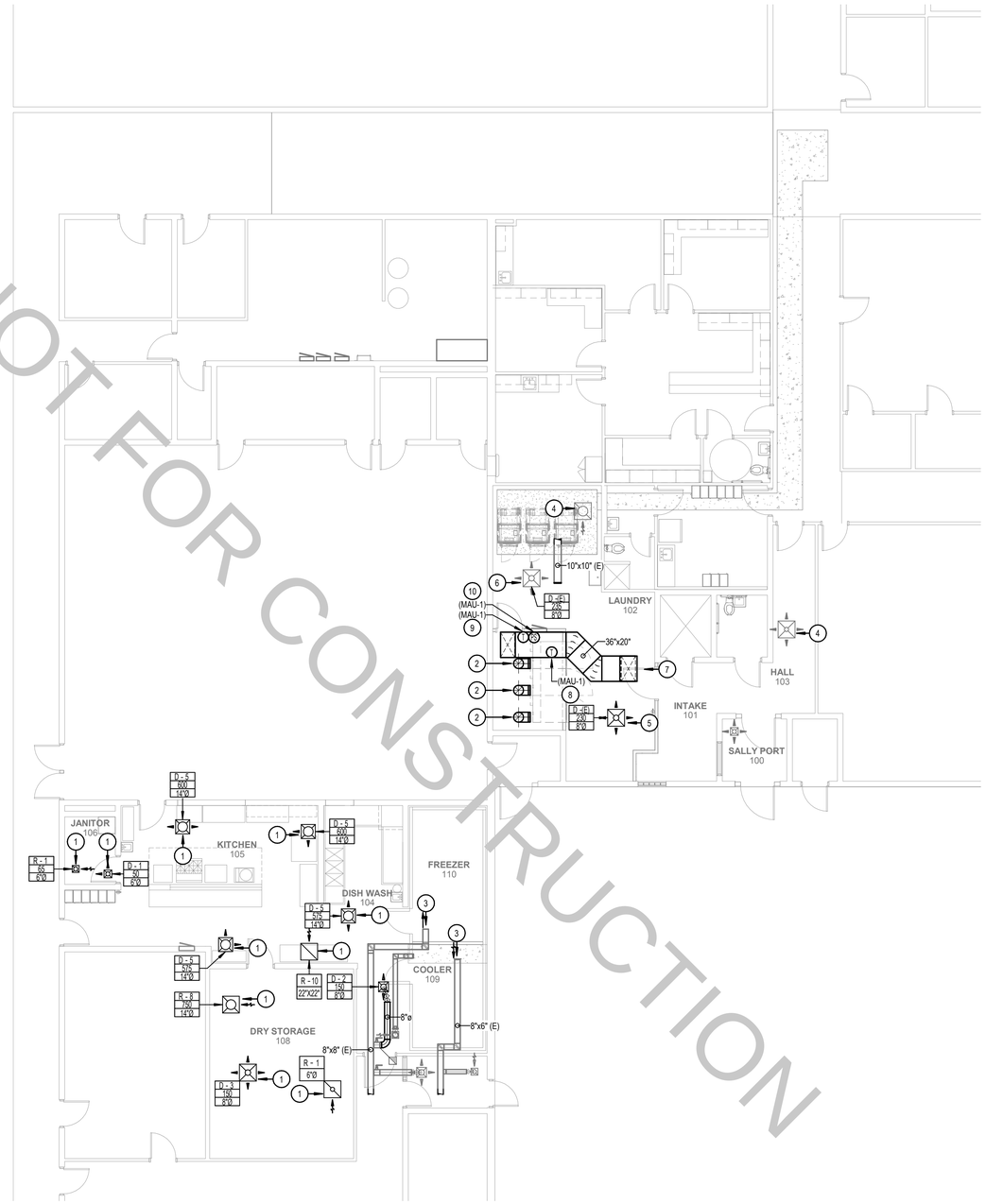

NOT FOR CONSTRUCTION

PROJECT NORTH

TRUE NORTH

1 NEW HVAC PLAN

1/8" = 1'-0"

MUSGROVE ENGINEERING, P.A.
234 S. Whisperwood Way
Boise, ID 83709
208.384.0585
645 West 25th Street
Idaho Falls, ID 83402
208.523.2862
www.musgrovepa.com

PROJECT NO. 22-059

KEYED NOTES:

(#) SYMBOL USED FOR CALLOUT

1. PLACE NEW DIFFUSERS AND RETURN GRILLES IN SAME LOCATION AS EXISTING GRILLES. CONNECT TO EXISTING DUCTWORK.
2. ROUTE 14" DRYER DUCTS UP THROUGH ROOF AND TERMIATE PER MANUFACTURER'S RECOMMENDATION.
3. EXISTING GRILLES ABOVE FREEZER AND COOLER UNIT ARE TO REMAIN AS-IS.
4. RELOCATE EXISTING GRILLES SLIGHTLY TO ALIGN WITH NEW CEILING GRID.
5. RELOCATE EXISTING GRILLE THAT WAS REMOVED TO THIS LOCATION. PROVIDE NEW FLEXIBLE DUCTWORK FROM EXISTING BRANCH DUCT TO NEW LOCATION. REBALANCE GRILLE TO NEW CFM.
6. RELOCATE EXISTING GRILLES SLIGHTLY TO ALIGN WITH NEW CEILING GRID. REBALANCE TO NEW CFM.
7. DUCT UP TO MAU-1 ON ROOF. SEE HVAC ROOF PLAN FOR PLACEMENT OF UNIT. TRANSITION TO CONNECTION OF UNIT AS NEEDED. PROVIDE WITH FLEXIBLE CONNECTION AT UNIT.
8. DUCT MOUNTED THERMOSTAT FOR CONTROL OF GAS MODULATION OF MAU ON ROOF.
9. WALL MOUNTED THERMOSTAT FOR ENABLE/DISABLE CONTROL OF GAS HEAT SECTION OF MAU ON ROOF.
10. WALL MOUNTED PRESSURE SENSOR FOR ENABLE/DISABLE CONTROL OF FAN SECTION OF MAU ON ROOF.

LOMBARD CONRAD ARCHITECTS
ARCHITECTURE | PLANNING
INTERIOR DESIGN
472 W. Washington St. | Boise, ID 83702
P 208.345.6677 | F 208.344.9002

COPYRIGHT All rights reserved. Reproduction or use in any form or by any means – graphic, electronic, mechanical, etc. – without written permission of **LOMBARD - CONRAD ARCHITECTS, P.C.** is unlawful and subject to criminal prosecution.

STAMP:

DPW 21535 - IDJC LAUNDRY & KITCHEN REMODEL - JCCN

IDAHO DPW - IDJC

CONSULTANT:

MRK	DATE	DESCRIPTION

JOB N0.:	22003.01
DATE:	08/12/22
DRAWN BY:	AH
CHECKED BY:	BC
PHASE:	100% DESIGN DEVELOPMENT

HVAC NEW PLAN

SHEET NO.

M1.1

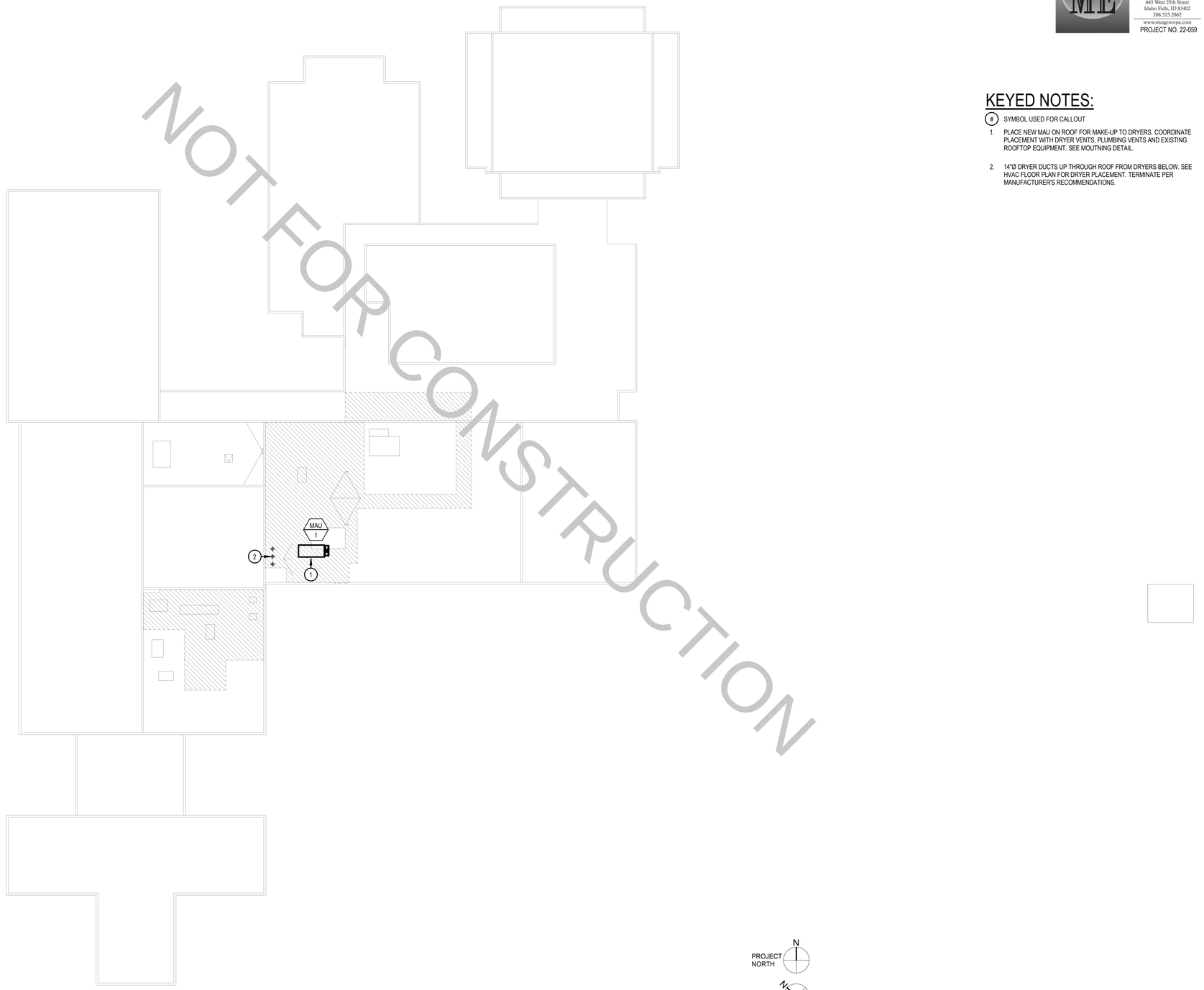

1 NEW HVAC ROOF PLAN
3/64" = 1'-0"

MUSGROVE ENGINEERING, P.A.
234 S. Whisperwood Way
Boise, ID 83709
208.384.0585
645 West 25th Street
Idaho Falls, ID 83402
208.523.2862
www.musgrovepa.com
PROJECT NO. 22-059

KEYED NOTES:

(#) SYMBOL USED FOR CALLOUT

1. PLACE NEW MAU ON ROOF FOR MAKE-UP TO DRYERS. COORDINATE PLACEMENT WITH DRYER VENTS, PLUMBING VENTS AND EXISTING ROOFTOP EQUIPMENT. SEE MOUTNING DETAIL.

2. 14"Ø DRYER DUCTS UP THROUGH ROOF FROM DRYERS BELOW. SEE HVAC FLOOR PLAN FOR DRYER PLACEMENT. TERMINATE PER MANUFACTURER'S RECOMMENDATIONS.

LOMBARD CONRAD ARCHITECTS
ARCHITECTURE | PLANNING
INTERIOR DESIGN
472 W. Washington St. | Boise, ID 83702
P 208.345.6677 | F 208.344.9002

COPYRIGHT All rights reserved. Reproduction or use in any form or by any means – graphic, electronic, mechanical, etc. – without written permission of **LOMBARD - CONRAD ARCHITECTS, P.C.** is unlawful and subject to criminal prosecution.

STAMP:

DPW 21535 - IDJC LAUNDRY & KITCHEN REMODEL - JCCN

IDAHO DPW - IDJC

CONSULTANT:

MRK	DATE	DESCRIPTION

JOB N0.:	22003.01
DATE:	08/12/22
DRAWN BY:	AH
CHECKED BY:	BC

PHASE: **100% DESIGN DEVELOPMENT**

HVAC ROOF PLAN

SHEET NO.

M2.0

NOTES:

1. FOR TAKE-OFFS LARGER THAN 12" DIAMETER, USE A FACTORY MANUFACTURED DAMPER. LOUVERS & DAMPERS, INC. MODEL CD-600 WITH A LOCKING HAND QUADRANT OR EQUAL.
2. ROD CONTINUOUS ON 2" W.G. CLASS AND ON ALL DAMPERS OVER 12" DIAMETER.
3. BLADE 22 GAGE MIN., BUT NOT LESS THAN TWO GAGES MORE THAN THE DUCT GAGE.
4. PROVIDE REMOTE CEILING OPERATOR WHERE DAMPER IS INACCESSIBLE.
5. FOR DUCTS OVER 12" HIGH USE MULTIPLE BLADE DAMPERS (SEE FIG. C).
6. ALTERNATE MANUFACTURERS INCLUDE: AMERICAN WARMING, SAFE-AIR/DOWCO, J&J, LOUVERS & DAMPERS, RUSKIN, NAILOR, ARROW UNITED, POTTORFF, & CESCO.

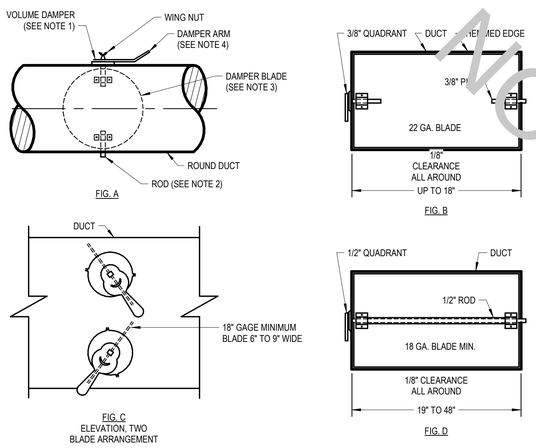

1 BALANCE DAMPER DETAIL
NTS

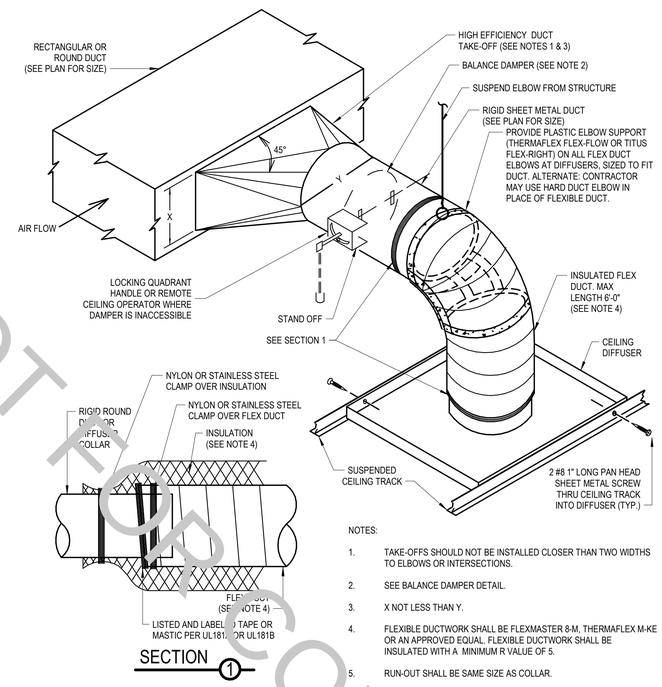

NOTES:

1. TAKE-OFFS SHOULD NOT BE INSTALLED CLOSER THAN TWO WIDTHS TO ELBOWS OR INTERSECTIONS.
2. SEE BALANCE DAMPER DETAIL.
3. X NOT LESS THAN Y.
4. FLEXIBLE DUCTWORK SHALL BE FLEXMASTER 8-M, THERMAFLEX M-KE OR AN APPROVED EQUAL. FLEXIBLE DUCTWORK SHALL BE INSULATED WITH A MINIMUM R VALUE OF 5.
5. RUN-OUT SHALL BE SAME SIZE AS COLLAR.

2 DUCT TAKEOFF DETAIL - HIGH EFFICIENT
NTS

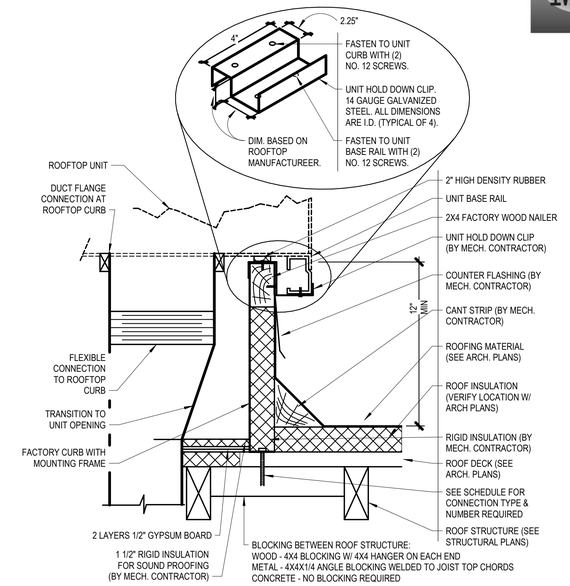

CURB TO ROOF CONNECTION SCHEDULE

NOMINAL ROOFTOP UNIT CAPACITY	MAX. WEIGHTS	TOTAL LATERAL FORCE (Fp)	NO. & TYPE OF CONNECTION (EQUALLY SPACED)		
			ROOF STRUCTURE TYPE		
			METAL	WOOD	CONCRETE
3-6 TONS	750 LBS	810 LBS	(4) 1/2" LAG BOLT	(4) 1/2" LAG BOLT	(4) 3/8" EXPANSION BOLT

COMPLIES WITH THE INTERNATIONAL BUILDING CODE

3 ROOFTOP UNIT MOUNTING DETAIL
NTS

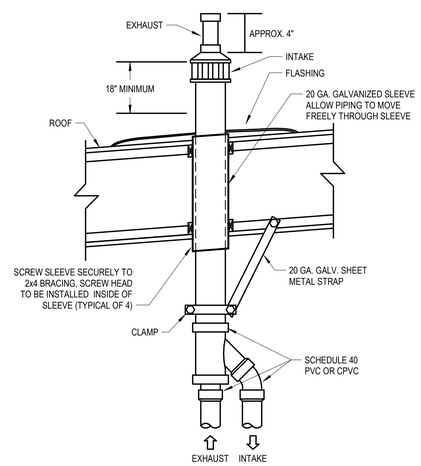

4 GAS VENT DETAIL (CONCENTRIC - 90%)
NTS

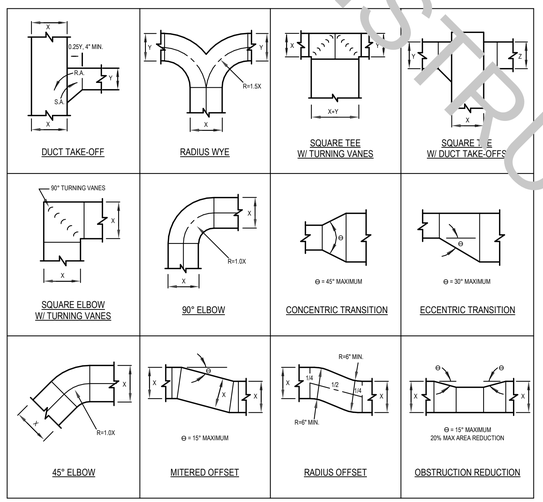

NOTE:
ALL DUCTWORK TRANSITIONS SHALL BE CONSTRUCTED AND INSTALLED TO SMACNA, SPECIFICATIONS AND THE ABOVE NOTED STANDARDS. ANY DEVIATIONS SHALL BE COORDINATED WITH THE ENGINEER.

5 RECTANGULAR DUCT FITTING DETAILS
NTS

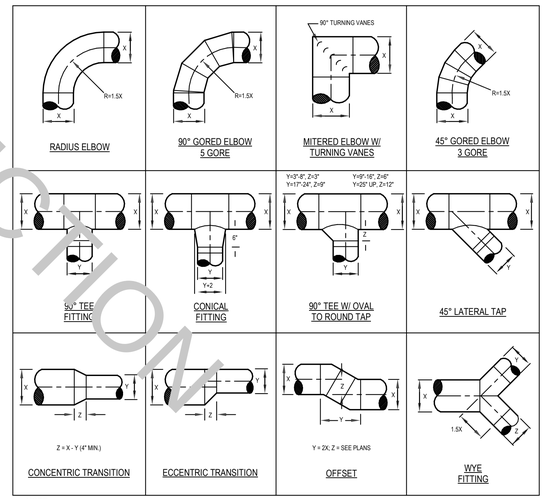

NOTE:
ALL DUCTWORK TRANSITIONS SHALL BE CONSTRUCTED AND INSTALLED TO SMACNA, SPECIFICATIONS, AND THE ABOVE NOTED STANDARDS. ANY DEVIATIONS SHALL BE COORDINATED WITH THE ENGINEER.

6 ROUND DUCT FITTING DETAILS
NTS

NOT FOR CONSTRUCTION

MUSGROVE ENGINEERING, P.A.
234 S. Whisperwood Way
Boise, ID 83709
208.384.0585
645 West 25th Street
Idaho Falls, ID 83402
208.523.2862
www.musgrovepa.com
PROJECT NO. 22-059

LOMBARD CONRAD ARCHITECTS
ARCHITECTURE | PLANNING
INTERIOR DESIGN
472 W. Washington St. | Boise, ID 83702
P 208.345.6677 | F 208.344.9002

COPYRIGHT All rights reserved. Reproduction or use in any form or by any means – graphic, electronic, mechanical, etc. – without written permission of LOMBARD - CONRAD ARCHITECTS, P.C. is unlawful and subject to criminal prosecution.

STAMP:

DPW 21535 - IDJC LAUNDRY & KITCHEN REMODEL - JCCN

IDAHO DPW - IDJC

CONSULTANT:

MRK	DATE	DESCRIPTION

JOB N0.:	22003.01
DATE:	08/12/22
DRAWN BY:	AH
CHECKED BY:	BC
PHASE:	100% DESIGN DEVELOPMENT

HVAC DETAILS

SHEET NO.

M3.0

GAS FIRED MAKE-UP AIR UNIT SCHEDULE

SYMBOL	AREA SERVED	TYPE	SUPPLY FAN			ELECTRICAL			TEMP RISE (°F)	GAS HEATING			WEIGHT (LBS)	MANUFACTURER AND MODEL	REMARKS
			CFM	ESP	HP	V/Ø	MCA	MOCP		INPUT MBH	OUTPUT MBH	TURN DOWN RATIO			
MAU-1	DRYER SUPPLY	OUTDOOR, INDIRECT GAS FIRED	2760	0.5	2.0	208/3	11	15	50	176.2	140.8	10:1	1600	AAON MODEL RN-009-8-0-0000-5FB	1 , 2 , 3 , 4

REMARKS:

1. APPROVED ALTERNATE MANUFACTURERS: REZNOR, DAIKIN APPLIED, STERLING, HASTINGS, GREENHECK, MCQUAY-DAIKIN, TRANE, ESSICK, RUPP AIR, AND WEATHERITE.
2. PROVIDE UNIT WITH E-3 (409) STAINLESS STEEL HEAT EXCHANGER, FILTER RACK AND FILTERS, INSULATED DOWNTURN PLENUM CABINET, 2-POSITION DISCHARGE DAMPER, 100% OSA SCREENED INLET AIR HOOD, AND 14" ROOF CURB. CAP TURN OPENING IN BOTTOM OF UNIT.
3. PROVIDE UNIT WITH TOTALLY ENCLOSED, PREMIUM EFFICIENCY MOTORS AND MOTOR STARTER.
4. PROVIDE UNIT WITH SUPPLY AIR TEMPERATURE SENSOR, AND A ROOM OVERRIDE THERMOSTAT. CONTROL VFD ON FAN WITH ROOM PRESSURE SENSOR.

DIFFUSER SCHEDULE

SYMBOL	NOMINAL SIZE	NECK / RUNOUT SIZE	CFM RANGE	REMARKS
D-1 CFM 6"Ø	6X6	6"Ø	0 - 90	1 , 2 , 3 , 4 , 5 , 6 , 7 , 8
D-2 CFM 8"Ø	9X9	8"Ø	90 - 200	1 , 2 , 3 , 4 , 5 , 6 , 7 , 8
D-3 CFM 10"Ø	12X12	10"Ø	200 - 350	1 , 2 , 3 , 4 , 5 , 6 , 7 , 8
D-4 CFM 12"Ø	15X15	12"Ø	300 - 500	1 , 2 , 3 , 4 , 5 , 6 , 7 , 8
D-5 CFM 14"Ø	15X15	14"Ø	400 - 650	1 , 2 , 3 , 4 , 5 , 6 , 7 , 8
D-6 CFM 16"Ø	18X18	16"Ø	600 - 900	1 , 2 , 3 , 4 , 5 , 6 , 7 , 8
D-7 CFM 21X21	21X21	21X21	900 - 1400	1 , 2 , 3 , 4 , 5 , 6 , 7 , 8

REMARKS:

1. ALTERNATE MANUFACTURERS: ANEMOSTAT, J&J REGISTER, NAILOR, METAL-AIRE, TUTTLE & BAILEY, KRUEGER, [illegible] AND UNITED ENERTECH.
2. SIZES BASED ON TITUS MODEL TDC SERIES OR WITH ADJUSTABLE THROW.
3. SIZES BASED ON A MAXIMUM NC LEVEL OF 25.
4. ALL DIFFUSERS LOCATED IN LAY-IN CEILING AREAS SHALL BE BORDER TYPE 3 AND BE MOUNTED IN MANUFACTURER PROVIDED 24"x24" PANELS. ALL DIFFUSERS LOCATED IN HARD CEILING AREAS SHALL BE BORDER TYPE 6 (BEVELED) SURFACE MOUNTED. SEE ARCHITECTURAL PLANS FOR LOCATIONS OF VARIOUS CEILING TYPES.
5. SEE HVAC FLOOR PLANS FOR DIRECTIONAL THROW REQUIREMENTS FOR EACH DIFFUSER.
6. ALL OF THE DIFFUSERS SHOWN IN THIS SCHEDULE MAY NOT BE USED. REFERENCE THE HVAC PLAN FOR DIFFUSER CALL-OUTS AND THE QUANTITY OF EACH SIZE REQUIRED.
7. WHENEVER THERE IS A DISCREPANCY BETWEEN THE RUNOUT DUCT SIZE SHOWN ON THE PLANS AND THAT SHOWN IN THE SCHEDULE, ALWAYS USE THE LARGER OF THE TWO DUCT SIZES.
8. COLOR TO BE SELECTED BY ARCHITECT.

RETURN & EXHAUST GRILLE SCHEDULE

SYMBOL	NOMINAL SIZE	NECK / RUNOUT SIZE	CFM RANGE	REMARKS
R-1 6"Ø	8X8	6"Ø	0-80	1 , 2 , 3 , 4 , 5 , 6 , 7
R-2 8"Ø	10X10	8"Ø	80-180	1 , 2 , 3 , 4 , 5 , 6 , 7
R-3 10"Ø	12X12	10"Ø	180-300	1 , 2 , 3 , 4 , 5 , 6 , 7
R-4 6"Ø	22X10	6"Ø	0-80	1 , 2 , 3 , 4 , 5 , 6 , 7
R-5 8"Ø	22X10	8"Ø	80-180	1 , 2 , 3 , 4 , 5 , 6 , 7
R-6 10"Ø	22X10	10"Ø	180-300	1 , 2 , 3 , 4 , 5 , 6 , 7
R-7 12"Ø	22X22	12"Ø	300-500	1 , 2 , 3 , 4 , 5 , 6 , 7
R-8 14"Ø	22X22	14"Ø	500-750	1 , 2 , 3 , 4 , 5 , 6 , 7
R-9 22X10	22X10	22X10	500-1100	1 , 2 , 3 , 4 , 5 , 6 , 7
R-10 22X22	22X22	22X22	1100-2000	1 , 2 , 3 , 4 , 5 , 6 , 7

REMARKS:

1. ALTNERNATE MANUFACTURERS: ANEMOSTAT, CARNES, PRICE, NAILOR, METAL-AIRE, TUTTLE & BAILEY, KRUEGER, J&J REGISTER, AND UNITED ENERTECH.
2. SIZES BASED ON TITUS MODEL 50F, ALUMINUM EGGCRATE RETURN GRILLE, 1/2" x 1/2" x 1" SPACING (SINGLE CORE). PROVIDE SQUARE TO ROUND TRANSITION (WHERE ROUND RUN-OUT INDICATED).
3. SIZES BASED ON A MAXIMUM NC LEVEL OF 25.
4. ALL GRILLES LOCATED IN LAY-IN CEILING AREAS SHALL HAVE BORDER #3, UNLESS OTHERWISE INDICATED. ALL GRILLES LOCATED IN HARD CEILING AREAS SHALL HAVE BORDER #1, UNLESS OTHERWISE INDICATED. REFER TO ARCHITECTURAL PLANS FOR LOCATIONS OF VARIOUS CEILING TYPES. SHEET METAL DUCTWORK VISIBLE BEHIND GRILLE SHALL BE PAINTED FLAT BLACK.
5. ALL OF THE GRILLES SHOWN IN THIS SCHEDULE MAY NOT BE USED. REFERENCE THE HVAC PLAN FOR GRILLE CALL-OUTS AND THE QUANTITY OF EACH SIZE REQUIRED.
6. WHENEVER THERE IS A DISCREPANCY BETWEEN THE RUNOUT DUCT SIZE SHOWN ON THE PLANS AND THAT SHOWN IN THE SCHEDULE, ALWAYS USE THE LARGER OF THE TWO DUCT SIZES.
7. COLOR TO BE SELECTED BY ARCHITECT.

NOT FOR CONSTRUCTION

MUSGROVE ENGINEERING, P.A.
234 S. Whisperwood Way
Boise, ID 83709
208.384.0585
645 West 25th Street
Idaho Falls, ID 83402
208.523.2862
www.musgrovepa.com
PROJECT NO. 22-059

LOMBARD CONRAD ARCHITECTS
ARCHITECTURE | PLANNING
INTERIOR DESIGN
472 W. Washington St. | Boise, ID 83702
P 208.345.6677 | F 208.344.9002

COPYRIGHT All rights reserved. Reproduction or use in any form or by any means – graphic, electronic, mechanical, etc. – without written permission of **LOMBARD - CONRAD ARCHITECTS, P.C.** is unlawful and subject to criminal prosecution.

STAMP:

DPW 21535 - IDJC LAUNDRY & KITCHEN REMODEL - JCCN

IDAHO DPW - IDJC

CONSULTANT:

MRK	DATE	DESCRIPTION

JOB N0.: **22003.01**
DATE: **08/12/22**
DRAWN BY: **AH**
CHECKED BY: **BC**

PHASE: **100% DESIGN DEVELOPMENT**

HVAC SCHEDULES

SHEET NO.
M4.0

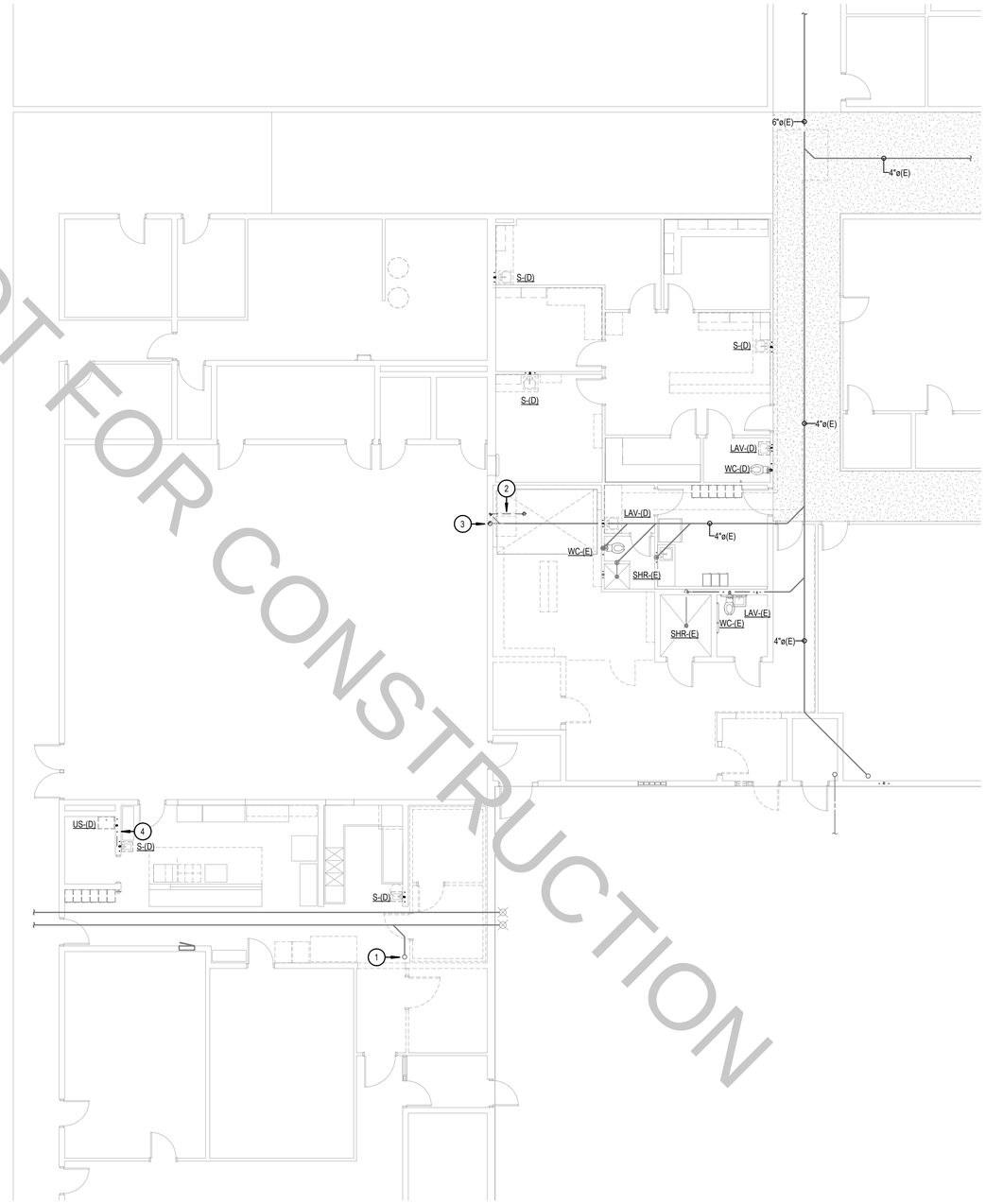

NOT FOR CONSTRUCTION

PROJECT NORTH

TRUE NORTH

1 DEMO PLUMBING FOUNDATION PLAN

1/8" = 1'-0"

KEYED NOTES:

(#) SYMBOL USED FOR CALLOUT

1. CUT FLOOR AND REMOVE EXISTING HUB DRAIN. SEE NEW PLAN FOR NEW WORK.
2. REMOVE EXISTING FLOOR DRAIN.
3. REMOVE EXISTING WASTE CONNECTION TO WALL BOX BEING REMOVED. CAP WASTE BELOW SLAB.
4. REMOVE PORTION OF EXISTING WASTE PIPING THAT IS FAILING AND REPLACE WITH NEW IN THIS AREA.

MUSGROVE ENGINEERING, P.A.
234 S. Whisperwood Way
Boise, ID 83709
208.384.0585
645 West 25th Street
Idaho Falls, ID 83402
208.523.2862
www.musgrovepa.com

PROJECT NO. 22-059

LOMBARD CONRAD ARCHITECTS
ARCHITECTURE | PLANNING
INTERIOR DESIGN
472 W. Washington St. | Boise, ID 83702
P 208.345.6677 | F 208.344.9002

COPYRIGHT All rights reserved. Reproduction or use in any form or by any means – graphic, electronic, mechanical, etc. – without written permission of **LOMBARD - CONRAD ARCHITECTS, P.C.** is unlawful and subject to criminal prosecution.

STAMP:

DPW 21535 - IDJC LAUNDRY & KITCHEN REMODEL - JCCN

IDAHO DPW - IDJC

CONSULTANT:

MRK	DATE	DESCRIPTION

JOB N0.:	22003.01
DATE:	08/12/22
DRAWN BY:	AH
CHECKED BY:	BC

PHASE: 100% DESIGN DEVELOPMENT

PLUMBING DEMO FOUNDATION

SHEET NO.

P1.0

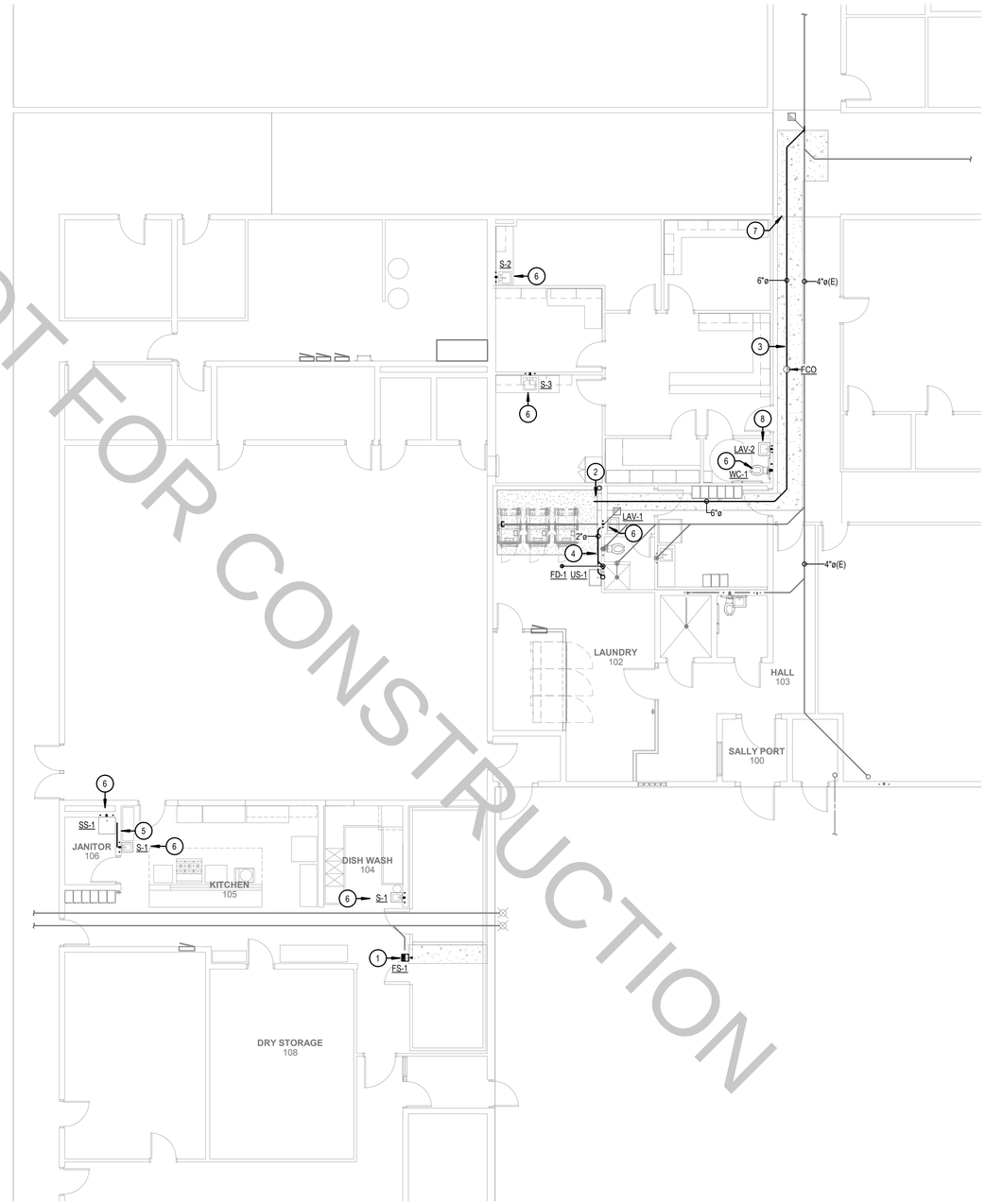

NOT FOR CONSTRUCTION

PROJECT NORTH

TRUE NORTH

1 NEW PLUMBING FOUNDATION PLAN
1/8" = 1'-0"

KEYED NOTES:

(#) SYMBOL USED FOR CALLOUT

1. INSTALL NEW FLOOR SINK ON EXISTING WASTE FROM HUB DRAIN. CONNECT TO EXISTING VENT PIPING.
2. CONNECT NEW 6" WASTE PIPE TO FLOOR TROUGH DRAIN AT BACK OF WASHING MACHINES. TRAP PIPE AND ROUTE VENT UP CORNER OF ROOM AS SHOWN. SEE FIRST FLOOR PLUMBING PLAN FOR CONTINUATION. SEE ARCHITECTURAL PLAN FOR DETAIL OF FLOOR TROUGH CONSTRUCTION.
3. ROUTE NEW WASTE PIPING ALONG EXISTING PIPING AND CONNECT IN HALLWAY AND CONNECT TO EXISTING 6" WASTE MAIN AS SHOWN. ROUTE NEW PIPE AT 1/4" PER FOOT SLOPE.
4. ROUTE NEW WASTE PIPE FROM NEW UTILITY SINK AND NEW FLOOR DRAIN TO EXISTING WASTE PIPE IN FLOOR AND CONNECT.
5. REPLACE EXISTING PORTION OF WASTE PIPING THAT WAS FAILING WITH NEW.
6. CONNECT NEW FIXTURE TO EXISTING WASTE PIPING.
7. CONTRACTOR TO CORE AND SLEEVE PIPE THROUGH EXISTING STEM WALL AT THIS LOCATION. USE SAME METHOD TO PENETRATE AND SLEEVE WALL AS EXISTING 4" LINE.
8. CONNECT NEW FIXTURE TO EXISTING PIPING. PLACE NEW LAV ON EXISTING SUPPORTS FROM EXISTING LAV. CONTRACTOR TO FIELD VERIFY EXISTING MODEL AND MOUNTING PRIOR TO ORDERING NEW FIXTURE TO ENSURE NEW FIXTURE WILL FIT ON EXISTING SUPPORT.

MUSGROVE ENGINEERING, P.A.
234 S. Whisperwood Way
Boise, ID 83709
208.384.0585
645 West 25th Street
Idaho Falls, ID 83402
208.523.2862
www.musgrovepa.com
PROJECT NO. 22-059

LOMBARD CONRAD ARCHITECTS
ARCHITECTURE | PLANNING
INTERIOR DESIGN
472 W. Washington St. | Boise, ID 83702
P 208.345.6677 | F 208.344.9002

COPYRIGHT All rights reserved. Reproduction or use in any form or by any means – graphic, electronic, mechanical, etc. – without written permission of **LOMBARD - CONRAD ARCHITECTS, P.C.** is unlawful and subject to criminal prosecution.

STAMP:

DPW 21535 - IDJC LAUNDRY & KITCHEN REMODEL - JCCN

IDAHO DPW - IDJC

CONSULTANT:

MRK	DATE	DESCRIPTION

JOB N0.:	22003.01
DATE:	08/12/22
DRAWN BY:	AH
CHECKED BY:	BC
PHASE:	100% DESIGN DEVELOPMENT

PLUMBING NEW FOUNDATION

SHEET NO.
P1.1

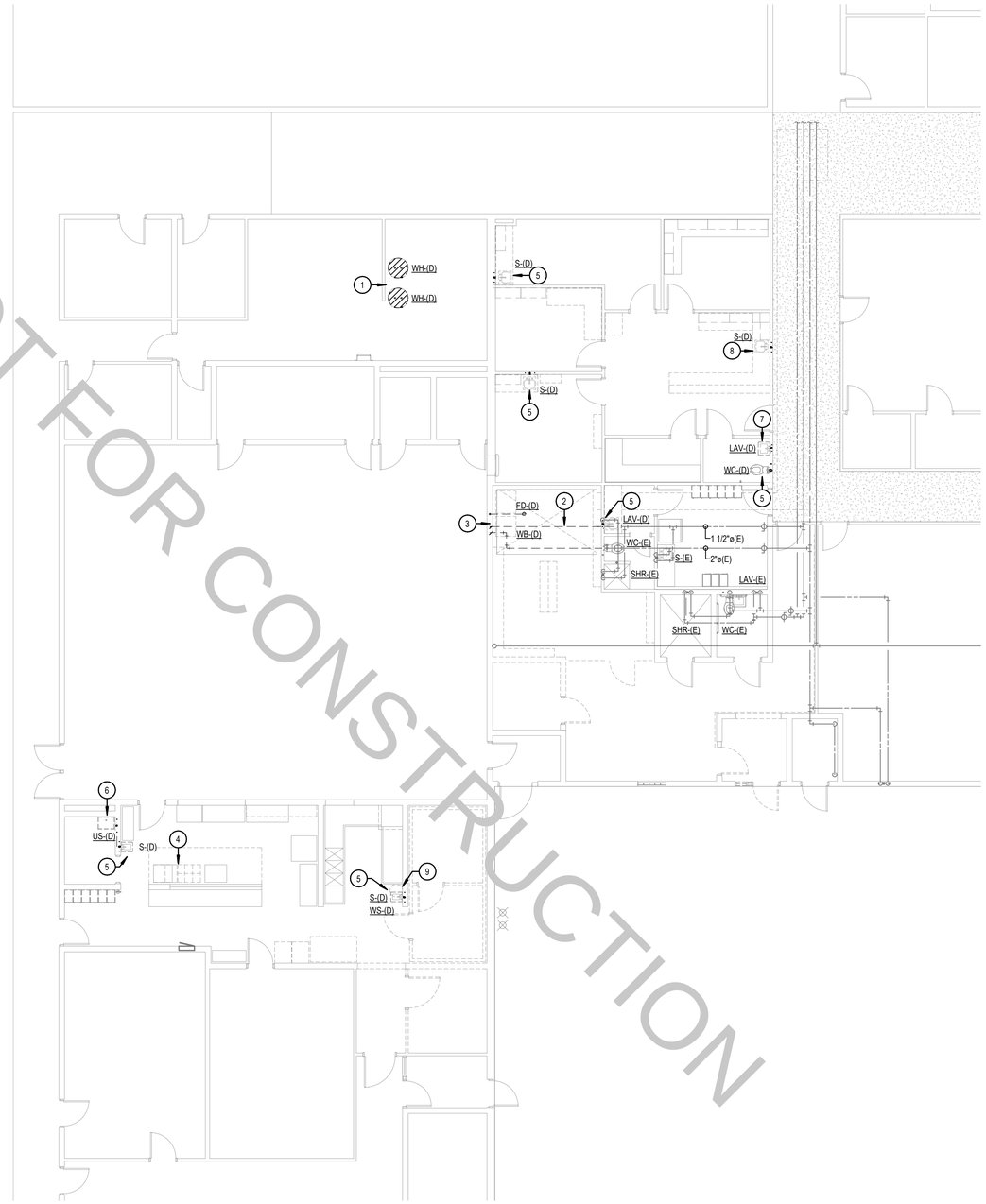

NOT FOR CONSTRUCTION

PROJECT NORTH

TRUE NORTH

1 DEMO PLUMBING 1ST FLOOR PLAN

1/8" = 1'-0"

MUSGROVE ENGINEERING, P.A.
234 S. Whisperwood Way
Boise, ID 83709
208.384.0585
645 West 25th Street
Idaho Falls, ID 83402
208.523.2862
www.musgrovepa.com

PROJECT NO. 22-059

KEYED NOTES:

(#) SYMBOL USED FOR CALLOUT

1. REMOVE EXISTING 100 GALLON 80% GAS WATER HEATERS. REMOVE EXISTING COMBUSTION AIR DUCTING AND EXISTING TYPE B VENT PENETRATIONS THROUGH ROOF AND PATCH ROOF.
2. REMOVE WALL BOX AND ASSOICATED WATER LINES IN CEILING SPACE. REMOVE BACK TO MAIN AND CAP AT NEAREST FITTING.
3. REMOVE EXISTING VENT PIPING IN WALL AND CEILING SPACE. REMOVE EXISTING VTR IN ROOF, LEAVE EXISTING OPENING FOR NEW VTR.
4. PIECE OF KITCHEN EQUIPMENT TO BE REMOVED. REMOVE EXISTING GAS CONNECTION BACK TO WALL.
5. DISCONNECT EXISTING PLUMBING AND REMOVE EXISTING FIXTURE. NEW FIXTURE TO BE PLACED IN SAME LOCATION AS EXISTING.
6. DISCONNECT EXISTING PLUMBING AND REMOVE EXISTING FIXTURE. NEW FLOOR MOUNTED FIXTURE TO BE LOCATED IN SAME LOCATION.
7. REMOVE EXISTING LAV. EXISTING PLUMBING CONNECTIONS TO REMAIN FOR RECONNECTION. CONTRACTOR TO REMOVE LAV WHILE LEAVING SUPPORT IN WALL. NEW LAV TO BE PLACED ON EXISTING SUPPORT.
8. REMOVE EXISTING PLUMBING FIXTURE. CAP EXISTING WATER AND WASTE PIPING AT WALL. FIXTURE NOT TO BE REPLACED.
9. REMOVE EXISTING WATER SOFTENER AND REPLACE WITH NEW. SEE NEW WORK PLAN.

LOMBARD CONRAD ARCHITECTS
ARCHITECTURE | PLANNING
INTERIOR DESIGN
472 W. Washington St. | Boise, ID 83702
P 208.345.6677 | F 208.344.9002

COPYRIGHT All rights reserved. Reproduction or use in any form or by any means – graphic, electronic, mechanical, etc. – without written permission of **LOMBARD - CONRAD ARCHITECTS, P.C.** is unlawful and subject to criminal prosecution.

STAMP:

DPW 21535 - IDJC LAUNDRY & KITCHEN REMODEL - JCCN

IDAHO DPW - IDJC

CONSULTANT:

MRK	DATE	DESCRIPTION

JOB N0.:	22003.01
DATE:	08/12/22
DRAWN BY:	AH
CHECKED BY:	BC

PHASE: **100% DESIGN DEVELOPMENT**

PLUMBING DEMO 1ST FLOOR

SHEET NO.

P2.0

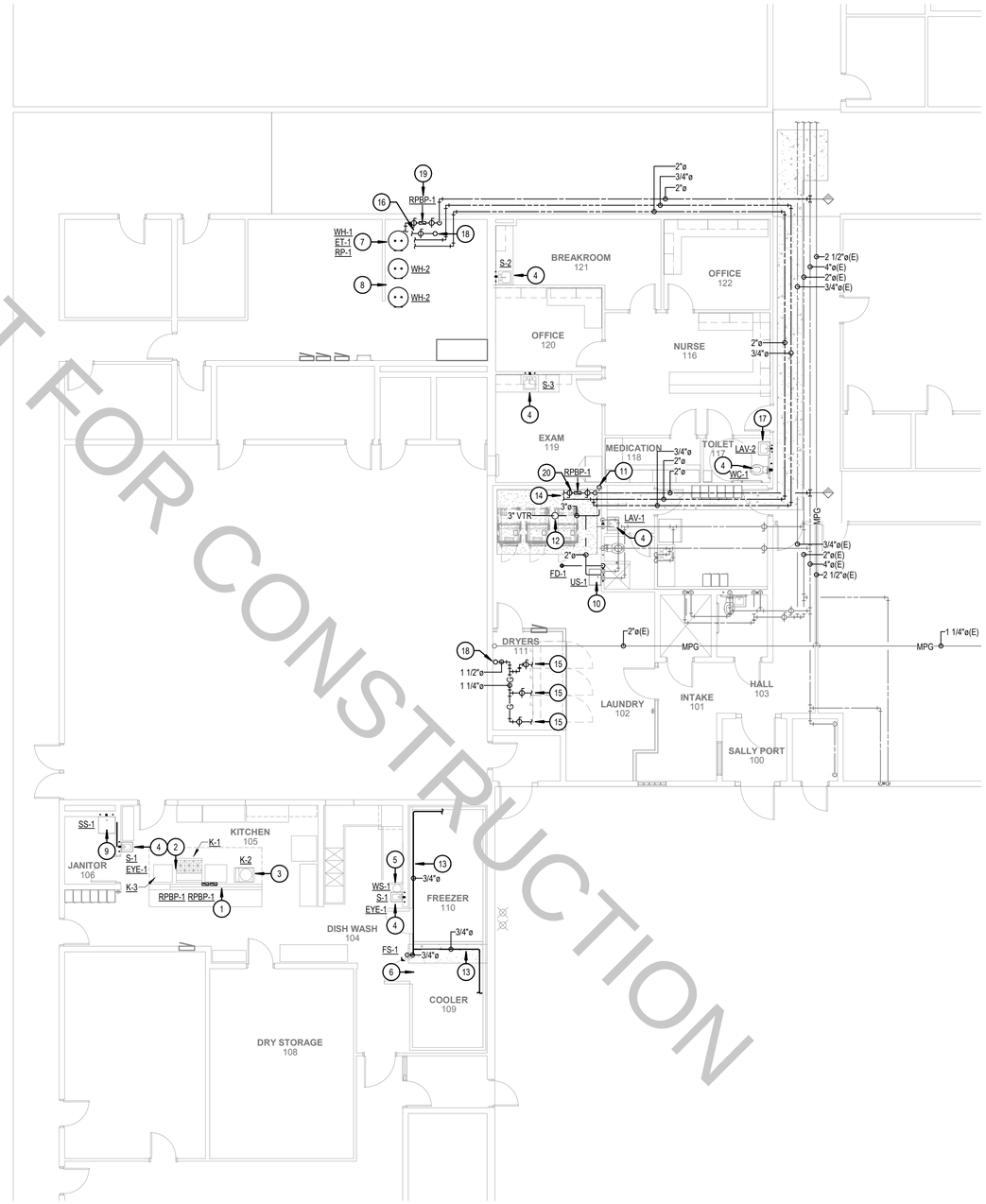

NOT FOR CONSTRUCTION

PROJECT NORTH

TRUE NORTH

1 NEW PLUMBING 1ST FLOOR PLAN

1/8" = 1'-0"

KEYED NOTES:

(#) SYMBOL USED FOR CALLOUT

1. CONNECT NEW 1/2" CW AND 1/2" HW LINES TO EXISTING CW AND HW IN WALL SERVING 3-COMPARTMENT SINK. ROUTE EACH NEW LINE THROUGH RPBP-1 BEFORE CONNECTING TO NEW GAS STEAM KETTLE. DRAIN RPBP FIXTURES TO FLOOR SINK BELOW 3-COMPARTMENT SINK.
2. RELOCATE EXISTING OVEN TO NEW LOCATION. SPLIT EXISTING GAS CONNECTION FROM EXISTING EQUIPMENT. ROUTE ONE LINE TO RELOCATED OVEN AND ROUTE OTHER LINE TO NEW GRILLE LOCATION AND CONNECT.
3. INSTALL NEW GAS STEAM KETTLE AT THIS LOCATION. CONNECT TO EXISTING GAS SUPPLY AT THIS LOCATION. CONNECT NEW WATER LINES, SEE KEYED NOTE 1. ROUTE DRAIN PIPE FROM DRAIN DRAWER OF STEAM KETTLE TO EXISTING FLOOR SINK AT THIS LOCATION.
4. INSTALL NEW PLUMBING FIXTURE IN LOCATION OF EXISTING. CONNECT TO EXISTING CONNECTIONS AT EACH LOCATION.
5. INSTALL NEW WATER SOFTENER IN LOCATION OF EXISTING UNIT.
6. RE-ROUTE EXISTING FIRE SPINKLER PIPING INTO HALLWAY AND PROVIDE ACCESS IN CEILING FOR DRAIN. EXISTING DRAIN LOCATED OVER FREEZER TO BE REMOVED AND RELOCATED.
7. INSTALL NEW DEDICATED WATER HEATER FOR LAUNDRY. INSTALL RPBP-1 ON COLD WATER LINE GOING TO WATER HEATER. ROUTE NEW 2" DEDICATED HW AND 3/4" HWR LINES TO WASHER LOCATION. SEE WATER HEATER PIPING DETAIL FOR MORE INFORMATION. ROUTE NEW VENT AND COMBUSTION AIR PIPING OUT ROOF AND TERMINATE WITH CONCENTRIC VENT KIT. ROUTE DRAIN TO FLOOR SINK LOCATED BETWEEN BOTH WH-2.
8. PLACE NEW WATER HEATERS IN LOCATION OF EXISTING REMOVED HEATERS. CUT NEW PENETRATIONS FOR NEW CONCENTRIC VENTS FOR WATER HEATERS. REUSE EXISTING RECIRCULATION PUMP AND EXPANSION TANK. SEE WATER HEATER PIPING DETAIL. RECONNECT TO EXISTING GAS SERVICE.
9. INSTALL NEW PLUMBING FIXTURE IN LOCATION. CONNECT TO EXISTING WATER IN WALL. SAW CUT FLOOR TO CONNECT NEW WATER PIPING UNDERGROUND TO EXISING WASTE PIPING IN AREA. ROUTE NEW VENT PIPING UP WALL, ENCASE AND CONNECT TO EXISTING VENT SYSTEM IN AREA.
10. CONNECT NEW 1/2" CW AND 1/2" HW LINES TO EXISTING LINES IN WALL THAT SERVICE EXISTING SHOWER FOR WATER SUPPLY TO US-1. EXISTING LINES IN WALL TO SERVE SHOWER AND UTILITY SINK.
11. ROUTE VENT PIPING DOWN CORNER OF ROOM TO TRAP OF WASTE PIPING CONNECTED TO FLOOR TROUGH DRAIN.
12. INSTALL NEW 3" VENT FOR NEW FLOOR TROUGH DRAIN. ROUTE 3" VENT PIPING UP THROUGH ROOF IN SAME LOCATION AS EXISTING, REMOVED, VTR.
13. ROUTE 3/4" CONDENSATE LINE FROM CONDENER IN FREEZER AND COOLER UNITS TO FLOOR SINK AS SHOWN. HEAT TAPE AND INSULATE FREEZER CONDENSATE LOCATED INSIDE FREEZER.
14. SEE COMMERCIAL CLOTHES WASHER PIPING DETAIL FOR CONNECTION INFORMATION TO WASHERS.
15. CONNECT GAS TO DRYER. PROVIDE WITH SHUT-OFF VALVE AND FLEXIBLE CONNECTION AT UNIT. SEE DETAIL.
16. CONNECT GAS TO NEW WATER HEATER. PROVIDE WITH SHUT-OFF VALVE AND FLEXIBLE CONNECTION. SEE WATER HEATER PIPING DETAIL AND GAS CONNECTION DETAIL.
17. CONNECT NEW FIXTURE TO EXISTING PIPING. PLACE NEW LAV ON EXISTING SUPPORTS FROM EXISTING LAV. CONTRACTOR TO FIELD VERIFY EXISTING MODEL AND MOUNTING PRIOR TO ORDERING NEW FIXTURE TO ENSURE NEW FIXTURE WILL FIT ON EXISTING SUPPORT.
18. GAS PIPE DOWN FROM ROOF. SEE PLUMBING ROOF PLAN FOR CONTINUATION.
19. ROUTE DRAIN FROM RPBP-1 TO FLOOR SINK BETWEEN BOTH WH-2.
20. DRAIN RPBP-1 TO FLOOR TROUGH BELOW.

MUSGROVE ENGINEERING, P.A.
234 S. Whisperwood Way
Boise, ID 83709
208.384.0585
645 West 25th Street
Idaho Falls, ID 83402
208.523.2862
www.musgrovepa.com
PROJECT NO. 22-059

LOMBARD CONRAD ARCHITECTS
ARCHITECTURE | PLANNING
INTERIOR DESIGN
472 W. Washington St. | Boise, ID 83702
P 208.345.6677 | F 208.344.9002

COPYRIGHT All rights reserved. Reproduction or use in any form or by any means – graphic, electronic, mechanical, etc. – without written permission of **LOMBARD - CONRAD ARCHITECTS, P.C.** is unlawful and subject to criminal prosecution.

STAMP:

DPW 21535 - IDJC LAUNDRY & KITCHEN REMODEL - JCCN

IDAHO DPW - IDJC

CONSULTANT:

MRK	DATE	DESCRIPTION

JOB N0.:	22003.01
DATE:	08/12/22
DRAWN BY:	AH
CHECKED BY:	BC
PHASE:	100% DESIGN DEVELOPMENT

PLUMBING NEW 1ST FLOOR

SHEET NO.

P2.1

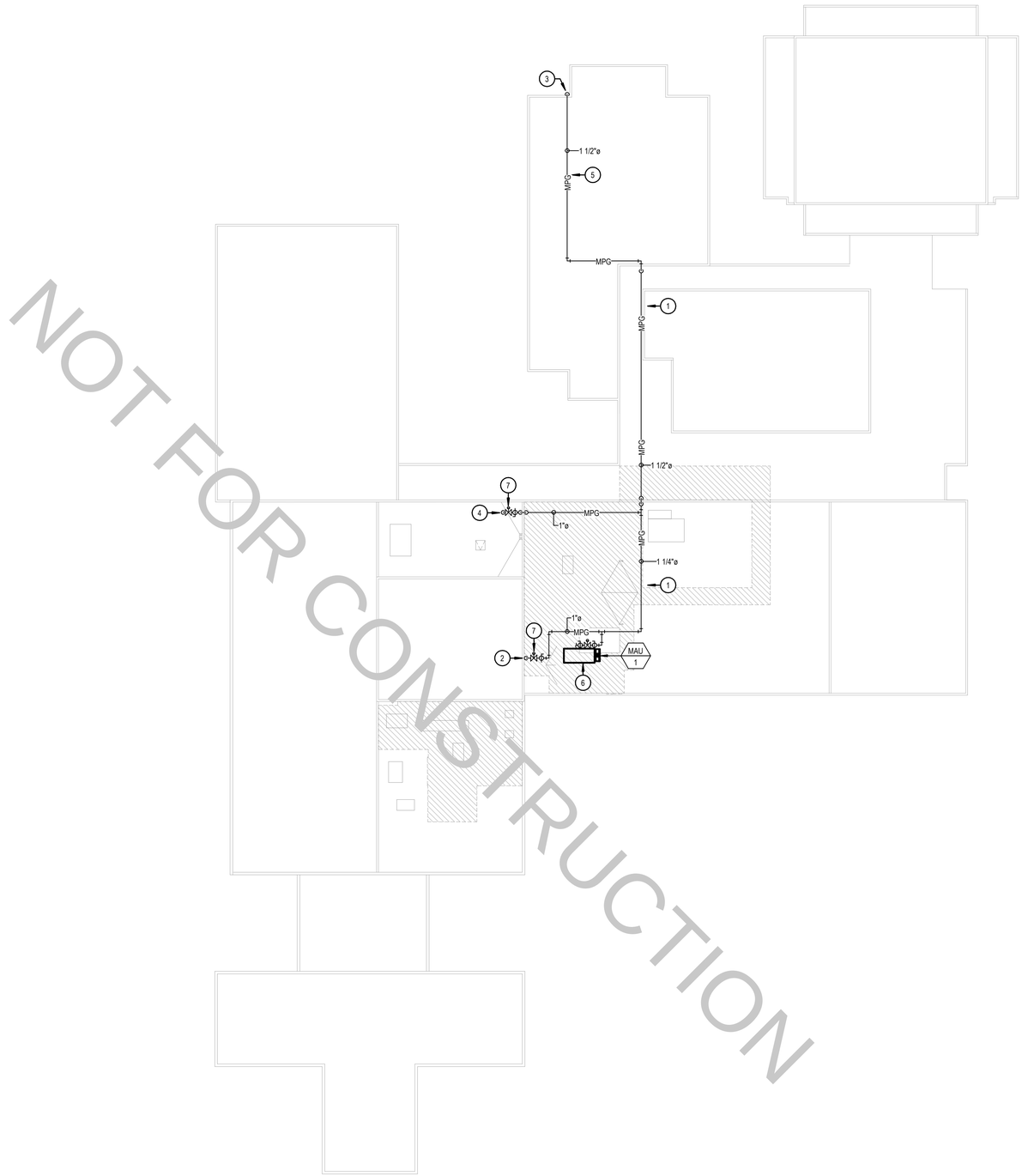

1 NEW OVERALL ROOF PLAN
3/64" = 1'-0"

PROJECT NORTH
TRUE NORTH

MUSGROVE ENGINEERING, P.A.
234 S. Whisperwood Way
Boise, ID 83709
208.384.0585
645 West 25th Street
Idaho Falls, ID 83402
208.523.2862
www.musgrovepa.com
PROJECT NO. 22-059

KEYED NOTES:

(#) SYMBOL USED FOR CALLOUT

1. ROUTE NEW GAS PIPING FROM EXISTING GAS METER TO NEW DRYER LOCATIONS. CONNECT TO NEW MAU, NEW DRYERS AND NEW WATER HEATER. SEE ROOF MOUNTED PIPING DETAIL.
2. ROUTE DOWN THROUGH ROOF TO CONNECT TO NEW GAS DRYERS. SEE PLUMBING FLOOR PLAN FOR CONTINUATION.
3. ROUTE EXPOSED DOWN EXTERIOR OF BUILDING AND CONNECT TO EXISING GAS METER. CONTRACTOR TO COORDINATE WITH INTERMOUNTAIN GAS FOR NEW ADDITIONAL GAS LOAD ADDED TO METER.
4. ROUTE DOWN THROUGH ROOF TO CONNECT TO NEW WATER HEATER.
5. COORDINATE GAS ROUTING LOCATION WITH SKYLIGHTS.
6. SEE ROOFTOP EQUIPMENT GAS CONNECTION DETAIL.
7. INSTALL PRESSURE REGULATOR ON ROOF. ROUTE 1 1/2" LOW PRESSURE GAS LINE THOUGH ROOF TO EQUIPMENT.

LOMBARD CONRAD ARCHITECTS
ARCHITECTURE | PLANNING
INTERIOR DESIGN
472 W. Washington St. | Boise, ID 83702
P 208.345.6677 | F 208.344.9002

COPYRIGHT All rights reserved. Reproduction or use in any form or by any means – graphic, electronic, mechanical, etc. – without written permission of **LOMBARD - CONRAD ARCHITECTS, P.C.** is unlawful and subject to criminal prosecution.

STAMP:

DPW 21535 - IDJC LAUNDRY & KITCHEN REMODEL - JCCN

IDAHO DPW - IDJC

CONSULTANT:

MRK	DATE	DESCRIPTION

JOB N0.:	22003.01
DATE:	08/12/22
DRAWN BY:	AH
CHECKED BY:	BC
PHASE:	100% DESIGN DEVELOPMENT

PLUMBING OVERALL ROOF PLAN

SHEET NO.
P3.0

MUSGROVE ENGINEERING, P.A.
234 S. Whisperwood Way
Boise, ID 83709
208.384.0585
645 West 25th Street
Idaho Falls, ID 83402
208.523.2862
www.musgrovepa.com
PROJECT NO. 22-059

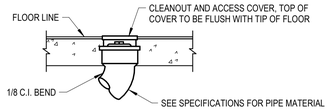

NOTE:
CLEANOUTS SHALL BE PROVIDED AT EACH HORIZONTAL DRAINAGE PIPE AT ITS UPPER TERMINAL, AND EACH RUN OF PIPING WHICH MORE THAN 100 FEET, AND SHALL BE PROVIDED FOR EACH 100 FEET DEVELOPED LENGTH, OR FRACTION THEREOF OF SUCH PIPING. AN ADDITIONAL CLEANOUT SHALL BE PROVIDED FOR EACH AGGREGATE HORIZONTAL CHANGE OF DIRECTION EXCEEDING ONE HUNDRED THIRTY-FIVE DEGREES, PER APPLICABLE PLUMBING CODE. THIS SHALL BE PROVIDED REGARDLESS OF WHAT IS SHOWN ON THE DRAWINGS.

1 FLOOR CLEANOUT (FCO) DETAIL
NTS

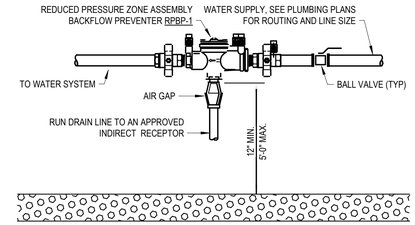

2 REDUCED PRESSURE BACKFLOW PREVENTER DETAIL
NTS

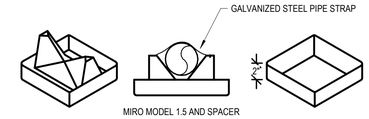

NOTE: ALL GAS PIPING SHALL BE SUPPORTED 6" MINIMUM ABOVE ROOF STRUCTURE

APPROVED PIPE SUPPORT SYSTEMS:

- MIRO MODEL 1.5 WITH SPACERS
- ADVANCED SUPPORT PRODUCTS
- VERSABLOCK BY FREEDOM INC

PIPE SUPPORT REQUIREMENTS	
SIZE OF PIPE	SUPPORT REQUIRED
1/2"	6' O.C.
3/4" - 1"	8' O.C.
1-1/4" OR LARGER	10' O.C.

3 ROOF MOUNTED PIPING SUPPORT DETAIL
NTS

EQUIPMENT CONNECTION NOTES:

1. INSTALL FLEX CONNECTION AT ALL ROOF TOP UNITS WHICH HAVE SPRING ISOLATION CURBS (36" MAXIMUM)
2. INSTALL SOLID PIPE CONNECTION TO ALL ROOF TOP UNITS WHICH DO NOT HAVE SPRING ISOLATION CURBS
3. PAINT PIPE WITH RUST RESISTANT PRIMER, RED OR GRAY. SHERWIN WILLIAMS PRO INDUSTRIAL DTM OR APPROVED EQUAL.

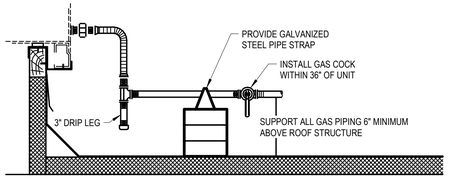

APPROVED PIPE SUPPORT SYSTEMS:

- MIRO MODEL 1.5 WITH SPACERS
- ADVANCED SUPPORT PRODUCTS
- VERSABLOCK BY FREEDOM INC

PIPE SUPPORT REQUIREMENTS	
SIZE OF PIPE	SUPPORT REQUIRED
1/2"	6' O.C.
3/4" - 1"	8' O.C.
1-1/4" OR LARGER	10' O.C.

4 GAS EQUIPMENT CONNECTION DETAIL (ROOFTOP UNIT)
NTS

VENTING NOTES:

1. VENT REGULATORS PER MANUFACTURER'S AND LOCAL GAS COMPANY'S REQUIREMENTS.
2. DO NOT REDUCE THE VENT PIPE SIZE FROM THE REGULATOR.
3. TO LIMIT THE CONSEQUENCES OF RAIN, SNOW, OR DEBRIS GETTING INTO THE VENT, ALWAYS TURN THE OUTLET OF THE VENT DOWN ABOVE POTENTIAL WATER OR SNOW LINES.
4. PROVIDE A BUG SCREEN ON THE VENT OUTLET TO DETER INSECTS FROM NESTING IN THE LINE. NEVER PAINT OVER THE BUG SCREEN.
5. A VENT LINE PROTECTOR MAY BE USED IN OUTDOOR APPLICATIONS TO PREVENT ENTRY OF WATER, INSECTS OR OTHER FOREIGN MATERIALS THAT COULD CAUSE BLOCKAGE.
6. VENT MUST BE PIPED A MINIMUM 3 FEET ABOVE OR 10 FEET AWAY FROM ALL FRESH AIR INTAKES.
7. VENTS SHALL RUN INDEPENDENTLY TO THE OUTDOORS AND SHALL SERVE ONLY A SINGLE DEVICE VENT.
8. REGULATOR VENT PIPING SHALL NOT EXCEED THE LENGTH SPECIFIED IN THE REGULATOR MANUFACTURER'S INSTRUCTIONS.

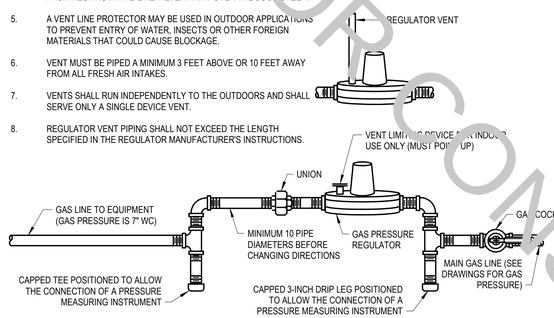

5 GAS PRESSURE REGULATOR DETAIL
NTS

GAS CONNECTION TO KITCHEN EQUIPMENT:
PLUMBING CONTRACTOR SHALL BE RESPONSIBLE FOR MAKING FINAL GAS CONNECTIONS TO KITCHEN EQUIPMENT. PLUMBING CONTRACTOR SHALL COORDINATE FLEXIBLE PIPING REQUIREMENTS WITH KITCHEN EQUIPMENT SUPPLIER.

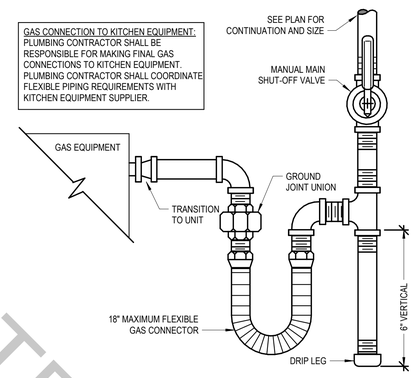

6 GAS EQUIPMENT CONNECTION DETAIL
NTS

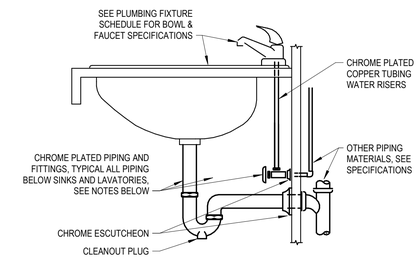

NOTES:

A. INTERIOR EXPOSED PIPE, VALVES AND FIXTURE TRIM, INCLUDING TRIM BEHIND CASEWORK DOORS SHALL BE CHROME PLATED.

B. ALL PIPING PENETRATIONS THROUGH FINISHED WALLS SHALL BE PROVIDED WITH CHROME ESCUTCHEONS.

C. ALL SINK TRAPS SHALL BE PROVIDED WITH A CLEANOUT PLUG IN THE BOTTOM OF THE TRAP.

D. ALL PLUMBING FIXTURES SHALL BE CAULKED AND SEALED TO SURROUNDING SURFACES.

7 SINK/LAVATORY TAILPIECE & TRAP DETAIL
NTS

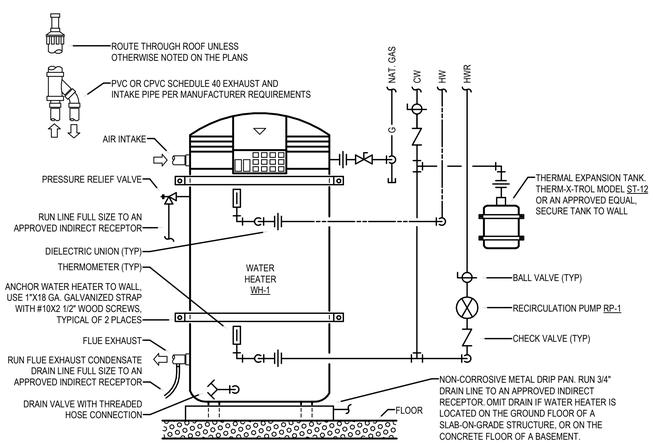

8 WATER HEATER DETAIL (GAS - HIGH EFFICIENT)
NTS

NOTE:
PIPING TO WATER HEATERS MUST BE PIPED IN A REVERSE RETURN PROCESS AS SHOWN

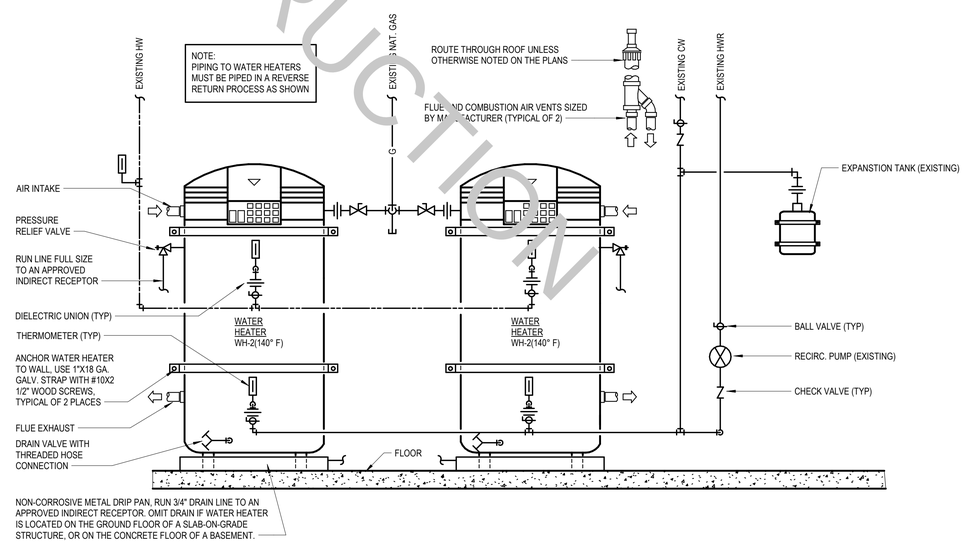

9 HIGH EFFICIENCY GAS WATER HEATER PIPING DETAIL
NTS

NOT FOR CONSTRUCTION

LOMBARD CONRAD ARCHITECTS
ARCHITECTURE | PLANNING
INTERIOR DESIGN
472 W. Washington St. | Boise, ID 83702
P 208.345.6677 | F 208.344.9002

COPYRIGHT All rights reserved. Reproduction or use in any form or by any means – graphic, electronic, mechanical, etc. – without written permission of LOMBARD - CONRAD ARCHITECTS, P.C. is unlawful and subject to criminal prosecution.

STAMP:

DPW 21535 - IDJC LAUNDRY & KITCHEN REMODEL - JCCN

IDAHO DPW - IDJC

CONSULTANT:

MRK	DATE	DESCRIPTION

JOB NO.:	22003.01
DATE:	08/12/22
DRAWN BY:	AH
CHECKED BY:	BC
PHASE:	100% DESIGN DEVELOPMENT

PLUMBING DETAILS

SHEET NO.

P4.0

MUSGROVE
ENGINEERING, P.A.
234 S. Whisperwood Way
Boise, ID 83709
208.384.0585
645 West 25th Street
Idaho Falls, ID 83402
208.523.2862
www.musgrovepa.com
PROJECT NO. 22-059

LOMBARD
CONRAD
ARCHITECTS
ARCHITECTURE | PLANNING
INTERIOR DESIGN
472 W. Washington St. | Boise, ID 83702
P 208.345.6677 | F 208.344.9002

COPYRIGHT All rights reserved. Reproduction or use in any form or by any means – graphic, electronic, mechanical, etc. – without written permission of **LOMBARD - CONRAD ARCHITECTS, P.C.** is unlawful and subject to criminal prosecution.

STAMP:

DPW 21535 - IDJC LAUNDRY & KITCHEN REMODEL - JCCN

IDAHO DPW - IDJC

CONSULTANT:

NOT FOR CONSTRUCTION

NOTES:

1. MAINTAIN ONE-FOURTH (1/4) INCH PER FOOT SLOPE.
2. THE DEVELOPED LENGTH BETWEEN THE TRAP OF A WATER CLOSET OR SIMILAR FIXTURE (MEASURED FROM THE TOP OF THE CLOSET FLANGE TO THE INNER EDGE OF THE VENT) AND IT'S VENT SHALL NOT EXCEED SIX (6) FEET.
3. ALL PLUMBING EQUIPMENT AND SYSTEMS SHALL BE INSTALLED IN ACCORDANCE WITH THE LATEST ADOPTED PLUMBING CODE, AND ALL LOCAL AND STATE CODES.

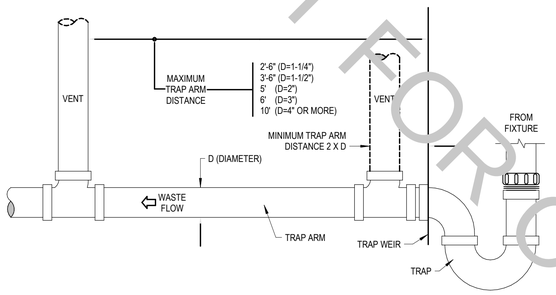

1 TRAP ARM DETAIL
NTS

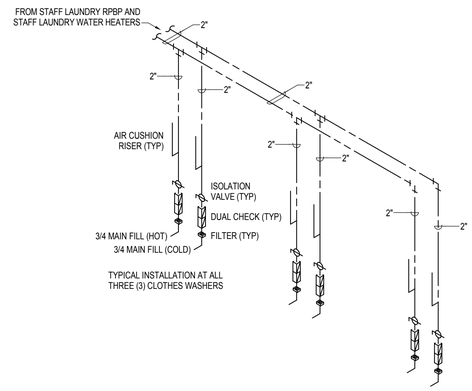

2 COMMERCIAL CLOTHERS WASHER PIPING DETAIL
NTS

PRESSSURE ACTIVATED TRAP PRIMER NOTES:

1. THE PRIMING VALVE MUST BE INSTALLED ON A FRESH COLD WATER LINE OF 1/2" TO 1-1/2" DIAMETER.
2. DISTRIBUTION UNIT MUST BE INSTALLED LEVEL WITH AN ACCESS DOOR FOR PERIODIC INSPECTION.
3. DO NOT SUBJECT TRAP PRIMER VALVE TO ROUGH-IN PRESSURE TEST.
4. DISTANCE FROM DISTRIBUTION UNIT TO FLOOR MUST BE 12" FOR EVERY 20' HORIZONTALLY.
5. TRAP PRIMER SHALL BE PRECISION PLUMBING PRODUCTS MODEL CPO-500 WITH DU DISTRIBUTION UNIT IF REQUIRED. APPROVED ALTERNATES: MIFAB, SIOUX CHIEF, AND ZURN.

TAILPIECE TRAP PRIMER NOTES:

1. THE TAILPIECE PRIMER IS DESIGNED TO PRIME ONE FLOOR DRAIN TRAP AT A DISTANCE NOT TO EXCEED 20 FEET FROM POINT OF INSTALLATION.
2. TRAP PRIMER SHALL BE DEARBORN BRASS MODEL 832-1 OR AN APPROVED EQUAL.

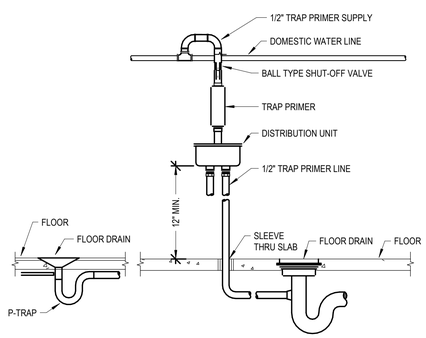

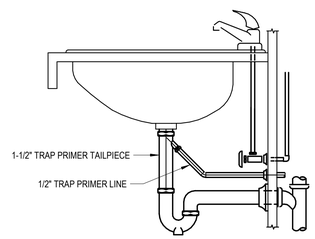

3 TRAP PRIMER CONNECTION DETAIL
NTS

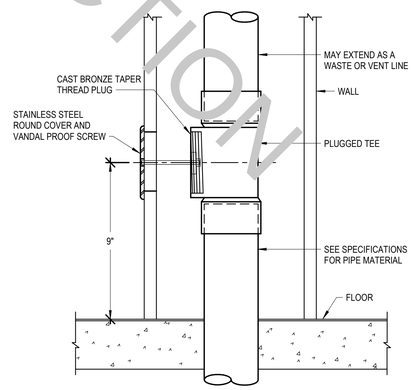

4 WALL CLEANOUT (WCO) DETAIL
NTS

MRK	DATE	DESCRIPTION

JOB N0.:	22003.01
DATE:	08/12/22
DRAWN BY:	AH
CHECKED BY:	BC
PHASE:	100% DESIGN DEVELOPMENT

PLUMBING DETAILS

SHEET NO.

P4.1

NOT FOR CONSTRUCTION

MUSGROVE ENGINEERING, P.A.
234 S. Whisperwood Way
Boise, ID 83709
208.384.0585
645 West 25th Street
Idaho Falls, ID 83402
208.523.2862
www.musgrovepa.com
PROJECT NO. 22-059

LOMBARD CONRAD ARCHITECTS
ARCHITECTURE | PLANNING
INTERIOR DESIGN
472 W. Washington St. | Boise, ID 83702
P 208.345.6677 | F 208.344.9002

COPYRIGHT All rights reserved. Reproduction or use in any form or by any means -- graphic, electronic, mechanical, etc. -- without written permission of LOMBARD - CONRAD ARCHITECTS, P.C. is unlawful and subject to criminal prosecution.

PLUMBING FIXTURE SCHEDULE

SYMBOL	FIXTURE DESCRIPTION	CONNECTION SIZE					MANUFACTURER / MODEL NUMBER / DESCRIPTION / ADDITIONAL COMMENTS
		WASTE	VENT	TRAP	CW	HW	
ET-1	EXPANSION TANK	--	--	--	3/4	--	AMTROL THERM-X-TROL ST- 12, OR APPROVED EQUAL, NON-ASME SERIES THERMAL EXPANSION ABSORBER, ANTI-MICROBIAL LINER, AND 5 YEAR WARRANTY.
EYE-1	EMERGENCY EYE WASH (FAUCET MOUNTED)	--	--	--	--	--	HAWS MODEL 76[illegible] AXION EYEPOD FAUCET-MOUNTED EYEWASH WITH INTERNAL THERMOSTATIC SHUT-OFF VALVE. EYEWASH IS ACTIVATED BY ROTATING HEAD 180°F IN EITHER DIRECTION. EYEWASH COMES WITH A STANDARD [illegible]4-27 THREAD STAINLESS STEEL FAUCET CONNECTION, ALONG WITH FOUR ADDITIONAL ADAPTORS. PROVIDE WITH OPTIONAL 1.0 GPM LAMINAR FLOW FAUCET OUTLET AND UNIVERSAL EYEWASH SIGN. ANSI Z358.1 AND OSHA COMPLIANT.
FCO	FLOOR CLEANOUT	SEE PLANS	--	--	--	--	JAY R. SMITH 4020 SERIES WITH ADJUSTABLE, ROUND NICKEL BRONZE TOP AND ABS PLUG.
FD-1	FLOOR DRAIN (PVC BODY) (CONCRETE FLOOR)	2	2	2	--	--	SIOUX CHIEF SERIES NUMBER 832-2PN[illegible] - CONSTRUCTION LEVELING FLOOR DRAIN, NO-HUB OUTLET, 6-1/2" ROUND, ADJUSTABLE NICKEL BRONZE STRAINER AND TRAP PRIMER PORT. INSTALL TOP OF DRAIN 1/8" BELOW FINISH FLOOR AND CAULK EDGE.
FS-1	FLOOR SINK (6" DEEP) (HALF GRATE, FOOT TRAFFIC RATED) COMMERCIAL KITCHEN, BAR, OR PROCESSING LOCATIONS	2	2	2	--	--	JAY R. SMITH FIGURE NUMBER 300[illegible]12, STAINLESS STEEL RECEPTOR, DOME STRAINER AND GRATE WITH TRAP PRIMER. INSTALL TOP OF SINK 1/8" BELOW FINISH FLOOR AND CAULK EDGE.
LAV-1	LAVATORY (WALL MOUNTED) (ADA COMPLIANT)	1 1/2	1 1/2	1 1/4	1/2	1/2	KOHLER KINGSTON MODEL K-2005: VITREOUS CHINA, WALL MOUNTED, HOLES ON 4" CENTERS, AND GRID STRAINER. KOHLER CORALAIS MODEL K-15198: 4-1/2" LONG, SINGLE LEVER FAUCET WITH 0.5 GPM AERATOR. PROVIDE WITH JAY R. SMITH FIGURE NUMBER 0700-Z SUPPORT WITH CONCEALED ARMS AND WATTS SERIES LFUSG-B LEAD-FREE, THERMOSTATIC MIXING VALVE ASSE STANDARD 1070 LISTED, BRONZE BODY, INTEGRAL CHECK VALVES, AND SELECTABLE TEMPERATURE RANGE FROM 80°F TO 120°F. PROVIDE WITH LS-1 LAV SHIELD.
LAV-2	LAVATORY (WALL MOUNTED) (ADA COMPLIANT)	1 1/2	1 1/2	1 1/4	1/2	1/2	KOHLER KINGSTON MODEL K-2005: VITREOUS CHINA, WALL MOUNTED, HOLES ON 4" CENTERS, AND GRID STRAINER. KOHLER CORALAIS MODEL K-15198: 4-1/2" LONG, SINGLE LEVER FAUCET WITH 0.5 GPM AERATOR. AND WATTS SERIES LFUSG-B LEAD-FREE, THERMOSTATIC MIXING VALVE, ASSE STANDARD 1070 LISTED, BRONZE BODY, INTEGRAL CHECK VALVES, AND SELECTABLE TEMPERATURE RANGE FROM 80°F TO 120°F. PROVIDE WITH LS-1 LAV SHIELD. VERIFY EXISTING MODEL PRIOR TO ORDERING NEW FIXTURE TO ENSURE NEW FIXTURE WILL MOUNT TO EXISTING WALL SUPPORT.
LS-1	LAVATORY SHIELD (WALL MOUNTED SHIELD FOR CONCEALING PIPING AND VALVES)	--	--	--	--	--	TRUEBRO "LAV SHIELD" ADA COMPLIANT, TOTAL ENCLOSURE. SINGLE-PIECE CONSTRUCTION, SLOAN OPTISHIELD ETF-529, OR APPROVED EQUAL.
RP-1	RECIRCULATION PUMP (HOT WATER RETURN SYSTEM) (MEDIUM SIZED SYSTEM)	--	--	--	--	3/4	BELL AND GOSSETT BRONZE MODEL NBF-22, 115 VOLT, 0.8 AMPS, 92 WATTS, AND SHALL PROVIDE 7 GPM AT 10 FEET HEAD. INCLUDE 7-DAY PROGRAMMABLE ELECTRONIC TIME CLOCK WITH BATTERY BACKUP, INTERMATIC MODEL GM40AVE-RD89. APPROVED ALTERNATE: ARMSTRONG, TACO, GRUNDFOS.
RPBP-1	REDUCED PRESSURE BACKFLOW PREVENTER	INDIRECT			--	--	WATTS SERIES LF009 LEAD-FREE REDUCED PRESSURE ZONE ASSEMBLY WITH QUARTER-TURN BALL VALVES, STRAINER, AND AIR GAP. CAST COPPER BODY CONSTRUCTION - 1/2" THRU 2". PROVIDE SERIES 957 FOR SIZES 2 1/2" THRU 10". SEE NOTE 6
S-1	SINK - KITCHEN HANDWASH (19" X 12" X 6") (WALL MOUNTED)	2	1 1/2	1 1/2	1/2	1/2	ELKAY HANDWASH SINK MODEL CHS1716C: 6" DEEP, WALL MOUNTED, STAINLESS STEEL SINK. PROVIDE AND INSTALL ELKAY MODEL LK940GN04L2H HIGH GOOSENECK SPOUT FAUCET WITH 8" CENTERS AND LEVER HANDLES, ELKAY MODEL LK8 GRID STRAINER AND TAILPIECE, ELKAY MODEL LK500 P-TRAP WITH CLEANOUT PLUG, AND WATTS SERIES LFUSG-B LEAD-FREE, THERMOSTATIC MIXING VALVE, ASSE STANDARD 1070 LISTED, BRONZE BODY, INTEGRAL CHECK VALVES, AND SELECTABLE TEMPERATURE RANGE FROM 80°F TO 120°F. PROVIDE WITH FAUCET-MOUNTED EYEWASH EYE-1. PROVIDE WITH FLOOR MOUNTED FOOT PEDALS ELKAY MODEL LK399A FOR FOOT OPERATION OF SINK.
S-2	SINK - BREAKROOM SINK (14" X 18 1/2" X 5 3/8") (UNDERMOUNT)	2	1 1/2	1 1/2	1/2	1/2	ELKAY LUSTERTONE CLASSIC MODEL ELUHAD11655PD: 5 3/8" DEEP, UNDERMOUNT, STAINLESS STEEL SINK. PROVIDE AND INSTALL ELKAY MODEL LK3000CR SINGLE LEVER CHROME FAUCET WITH SWING SPOUT, ELKAY MODEL LK35 STAINLESS STEEL STRAINER BASKET AND TAILPIECE, AND WATTS SERIES LFUSG-B LEAD-FREE, THERMOSTATIC MIXING VALVE, ASSE STANDARD 1070 LISTED, BRONZE BODY, INTEGRAL CHECK VALVES, AND SELECTABLE TEMPERATURE RANGE FROM 80°F TO 120°F.
S-3	SINK - EXAM SINK (14" X 18 1/2" X 5 3/8") (MOTION SENSOR) (UNDERMOUNT)	2	1 1/2	1 1/2	1/2	1/2	ELKAY LUSTERTONE CLASSIC MODEL ELUHAD11655PD: 5 3/8" DEEP, UNDERMOUNT, STAINLESS STEEL SINK. PROVIDE AND INSTALL ELKAY MODEL LK3001CR SINGLE LEVER CHROME FAUCET WITH SWING SPOUT AND HOSE SPRAY, ELKAY MODEL LK35 STAINLESS STEEL STRAINER BASKET AND TAILPIECE, AND WATTS SERIES LFUSG-B LEAD-FREE, THERMOSTATIC MIXING VALVE, ASSE STANDARD 1070 LISTED, BRONZE BODY, INTEGRAL CHECK VALVES, AND SELECTABLE TEMPERATURE RANGE FROM 80°F TO 120°F. PROVIDE WITH FAUCET-MOUNTED EYEWASH EYE-1
SS-1	SERVICE SINK (24" X 24" X 10") (FLOOR MOUNTED)	3	2	3	1/2	1/2	ACORN TERRAZZO-WARE MODEL TRH-242410: PROVIDE AND INSTALL WITH MODEL KFC CHROME UTILITY FAUCET, STAINLESS STEEL BUMPER GUARD, DRAIN GASKET, 36" HOSE AND WALL HANGER, MOP HANGER, AND (2) STAINLESS STEEL WALL GUARDS. MOUNT FAUCET 36" AFF.
TP-1	TRAP PRIMER (PRESSURE ACTIVATED) (1 TO 4 TRAPS)	--	--	--	1/2"	--	PRECISION PLUMBING PRODUCTS MODEL CPO-500 WITH DU DISTRIBUTION UNIT IF REQUIRED FOR SERVING MORE THAN ONE TRAP. APPROVED ALTERNATES: MIFAB, SIOUX CHIEF, SLOAN, AND ZURN
TP-1	TRAP PRIMER (LAVATORY TAILPIECE PRIMER) (1 TRAP)	--	--	--	1/2"	--	DEARBORN BRASS 1-1/2" TRAP PRIMER TAILPIECE WITH COMPRESSION CONNECTION.
US-1	UTILITY SINK (23" X 21" X 13") (FLOOR MOUNTED)	2	1 1/2	1 1/2	1/2	1/2	FIAT MOLDED STONE MODEL FL-1 FLOOR MOUNTED SINK WITH EASY LEVELING LEGS, DRAIN ASSEMBLY AND STOPPER WITH FIAT A1 CHROME FAUCET, DECK MOUNTED, 4" O.C. WITH 4" WRISTBLADES, 6-3/4" SWING SPOUT, AND WATTS SERIES LFUSG-B LF, THERMOSTATIC MIXING VALVE, ASSE STANDARD 1070 LISTED, BRONZE BODY, INTEGRAL CHECK VALVES, AND SELECTABLE TEMPERATURE RANGE FROM 80°F TO 120°F.
WC-1	WATER CLOSET (17-1/2" SEAT HEIGHT) (FLUSH VALVE) (FLOOR MOUNTED) (COMFORT HEIGHT / ADA COMPLIANT)	4	2	INT.	1	--	KOHLER HIGHCLIFF ULTRA MODEL K-96057 FLOOR MOUNTED WITH ELONGATED BOWL. KOHLER LUSTRA MODEL K-4666-C ELONGATED OPEN FRONT SEAT WITH HINGE. SLOAN REGAL MODEL 111-1.6 FLUSHOMETER, 1.6 GPF.
WCO	WALL CLEANOUT	SEE PLANS	--	--	--	--	JAY R. SMITH 4472T SERIES WITH CAST BRONZE TAPER THREAD PLUG, STAINLESS STEEL ROUND COVER, AND A STAINLESS STEEL VANDAL PROOF SCREW.
WH-1	WATER HEATER (NOMINAL 120 GALLON) (NATURAL GAS - HIGH EFFICIENCY)	--	--	--	SEE PLANS	SEE PLANS	BRADFORD WHITE MODEL EF-120T-400E-3N. 399 MBH INPUT, 110V/1Ø, 1.8 AMPS , 33" DIAMETER, 78" TALL WITH SIDE CONNECTIONS. PROVIDE WITH PVC CONCENTRIC INTAKE/VENT KIT AND SEISMIC STRAP. PROVIDE WATER HEATER WITH HEAT TRAP.
WH-2	WATER HEATER (NOMINAL 100 GALLON) (NATURAL GAS - HIGH EFFICIENCY)	--	--	--	SEE PLANS	SEE PLANS	BRADFORD WHITE MODEL EF-100T-199E-3N. 199 MBH INPUT, 110V/1Ø, 1.8 AMPS , 28" DIAMETER, 78" TALL WITH SIDE CONNECTIONS. PROVIDE WITH PVC CONCENTRIC INTAKE/VENT KIT AND SEISMIC STRAP. PROVIDE WATER HEATER WITH HEAT TRAP.
WS-1	WATER SOFTENER	INDIRECT			1	--	KINETICO ESSENTIAL SERIES, ESSENTIAL GOLD, 9.5 GPM @ 15 PSI MAX PRESSURE DROP, 6.6 GALLON REGENERATION VOLUME, 15 MINUTE CYCLE TIME.

NOTES:

1. ALL ADA COMPLIANT FIXTURES MUST COMPLY WITH ICC/ANSI A117.1. SEE ARCHITECTURAL PLANS FOR HANDICAPPED FIXTURE DESIGNATIONS, LOCATIONS, CLEARANCES, AND MOUNTING HEIGHTS.
2. ALL EXPOSED HW PIPING, CW PIPING, AND DRAIN LINES BENEATH ALL LAVATORIES AND ALL ADA COMPLIANT SINKS MUST BE INSULATED TO PREVENT INJURY. REFER TO ARCHITECTURAL PLANS. INSULATE WITH MOLDED CLOSED CELL VINYL INSULATION - TRUEBRO, PLUMBEREX, OR EQUAL.
3. PROVIDE P-TRAP PRIMERS FOR ALL FLOOR DRAINS AND FLOOR SINKS (NOT ALL TRAP PRIMERS ARE INDICATED ON PLANS - REFERENCE DETAILS FOR ADDITIONAL INFORMATION). PROVIDE A BALL TYPE SHUT-OFF VALVE UPSTREAM OF PRIMER VALVE. SEE SPECIFICATIONS.
4. SEE SPECIFICATIONS FOR ALTERNATE APPROVED MANUFACTURERS.
5. HIGH EFFICIENCY WATER HEATERS: PROVIDE WITH CONDENSATE NEUTRALIZATION KIT BY JJM BOILER WORKS MODEL JM (OR EQUAL), SIZED PER EQUIPMENT CAPACITY.
6. BACKFLOW PREVENTION: THIS BUILDING IS PROVIDED WITH A REDUCED PRESSURE BACKFLOW PREVENTER (RPBP) ON THE MAIN WATER SERVICE AND ON THE FOLLOWING PIECES OF EQUIPMENT:
   WASHER HOT AND COLD WATER
   STEAM KETTLE HOT AND COLD WATER

KITCHEN PLUMBING EQUIPMENT SCHEDULE

SYMBOL	EQUIPMENT REFERENCE	FIXTURE DESCRIPTION	CONNECTION SIZE						MANUFACTURER / MODEL NUMBER / DESCRIPTION / ADDITIONAL COMMENTS	REMARKS
			WASTE	VENT	TRAP	CW	HW	GAS		
K-1	--	RANGE	--	--	--	--	--	3/4"	PROVIDED BY KITCHEN EQUIPMENT CONTRACTOR ROUGH-IN & INSTALLED BY PLUMBING CONTRACTOR. SEE KITCHEN EQUIPMENT PLANS FOR DETAILS AND REQUIREMENTS OF KITCHEN EQUIPMENT.	--
K-2	--	STEAM KETTLE	INDIRECT TO FLOOR SINK			1/2"	1/2"	3/4"	PROVIDED BY KITCHEN EQUIPMENT CONTRACTOR ROUGH-IN & INSTALLED BY PLUMBING CONTRACTOR. SEE KITCHEN EQUIPMENT PLANS FOR DETAILS AND REQUIREMENTS OF KITCHEN EQUIPMENT.	1
K-3	--	EXISTING OVEN	--	--	--	--	--	3/4"	PROVIDED BY KITCHEN EQUIPMENT CONTRACTOR ROUGH-IN & INSTALLED BY PLUMBING CONTRACTOR. SEE KITCHEN EQUIPMENT PLANS FOR DETAILS AND REQUIREMENTS OF KITCHEN EQUIPMENT.	--

NOTES:

1. PROVIDE WITH LINE-SIZED REDUCED PRESSURE BACKFLOW PREVENTER.

GAS SIZING CHART

SYMBOL	INPUT (MBH)	RUNOUT SIZE (2PSI) (INCHES)	EQUIPMENT CONNECTION SIZES (7" WC) (INCHES)
MAU-1	176.2	3/4	1 1/2
WH-1	399	1 1/2	3/4
DRYER	135	3/4	1/2
DRYER	135	3/4	1/2
DRYER	135	3/4	1/2
TOTAL	980.2	EQUIVALENT LENGTH = 400 FT PRESSURE = 2 PSI MAIN SIZE = 1 1/2"Ø	

NOTE: GAS SIZES TO EQUIPMENT ARE AS NOTED IN SCHEDULE ABOVE. ROUTE NOTED (2PSI) GAS LINE TO GAS EQUIPMENT. PROVIDE GAS COCK AND PRESSURE REGULATOR (2 PSI-7" WC) SIZED FOR GAS LOAD AT EACH PIECE OF EQUIPMENT. VENT TO ATMOSPHERE PER MANUFACTURERS RECOMMENDATIONS. ROUTE NOTED (7" WC) GAS LINE TO GAS FIRED EQUIPMENT WITH GAS COCK AND FLEX CONNECTOR AT UNIT. SEE GAS CONNECTION DETAILS.

STAMP:

DPW 21535 - IDJC LAUNDRY & KITCHEN REMODEL - JCCN

IDAHO DPW - IDJC

CONSULTANT:

MRK	DATE	DESCRIPTION

JOB N0.: **22003.01**
DATE: **08/12/22**
DRAWN BY: **AH**
CHECKED BY: **BC**

PHASE: **100% DESIGN DEVELOPMENT**

PLUMBING SCHEDULES

SHEET NO.

P5.0